SALOMON BROTHERS INC

7 WORLD TRADE CENTER HEADQUARTERS

Mechanical/Electrical/Plumbing
Fire Protection and Vertical Transportation

Base Building Modifications

Prepared for:
Skidmore, Owings & Merrill
220 East 42nd Street
New York, New York 10017

Prepared by:
Flack + Kurtz Consulting Engineers
475 Fifth Avenue
New York, New York 10017

John A. Van Deusen & Associates, Inc
5 Regent Street
Livingston, New Jersey 07039

September 15, 1988

RECEIVED
SEP 19 1988
IRWIN G. CANTOR
CONSULTING ENGINEERS

RECEIVED
DEC 10 2002

TABLE OF CONTENTS

I. HEATING, VENTILATION, AND AIR CONDITIONING

II. ELECTRICAL

III. PLUMBING

IV. FIRE PROTECTION

V. VERTICAL TRANSPORTATION

SALOMON BROTHERS INC.

7 WORLD TRADE CENTER HEADQUARTERS

New York, New York 10048

I. HVAC

The Base Building HVAC system presently installed in 7 World Trade Center is commonly referred to as a floor-by-floor DX system. The basic components are 7,500 tons of cooling towers located on the 46th floor with appropriate condenser water pumps on the 45th floor serving two (2) Direct Expansion Trane Compartmental Units (45 tons each) on floors 7 thru 47 inclusive. The perimeter areas of the building are heated by finned tube time radiation with water pumped from the 5th floor. Hot water is generated with Con Ed high pressure street steam.

This HVAC system is designed to maintain 78°F on all floors with an average power load of 3.5 watts per sq. ft. The requirements of SBI, for all its space, exceed the capacity of the Base Building system. The modifications described below are required.

For the ultimate number of floors of occupancy of SBI, a supplemental chilled water plant of 4,400 tons will be installed on the roof together with multiple cooling tower cells, condenser water, chilled water pumps and heat exchangers to accommodate the tonnage.

Chilled water from this plant will be used predominately to serve units located on the two (2) technology floors (35 & 44), the present three (3) and one (1) future trading floors (36, 38, 40 and 42), and the local office support spaces located on all floors.

Chilled water will also serve the Health Club on the 47th floor and the auditorium on the 38th floor.

Floors 45 and 46 (except where otherwise noted) will be served by either new DX Units or chilled water units located on the 47th floor.

Floors 30 thru 34, 36 and 37 will also be served by the existing DX units in their present location. One existing relocated Trane DX unit each will also serve the mezzanine of each trading floor (floors 39, 41 and 43), the area on

the trading floor below the mezzanine (floors 38, 40 and 42) and the 44th and 35th technology floors. Two (2) existing relocated Trane DX units each will serve the western portion of each Production Floor (floors 30 thru 34 and temporary production floors 36 and 37).

Until the fourth trading floor is constructed, the 36th and 37th floors will be configured as Production Office floors served by the existing DX units in their present mechanical rooms with additions as called for above.

All DX units, whether relocated or as presently installed, will be connected to the existing Base Building condensing water system. The present fresh air shaft (gravity type) will be relocated westward and converted to a pressurized shaft served by a conditioned make-up air unit installed on the roof. This shaft shall extend from the roof to and including the 30th floor. It shall be sized for future extension down to and including floor 24.

Until SBI extends to floor 24, ventilation air for floors 24 thru 29 inclusive will be provided by an extension of the lower gravity shaft. The extension will be fitted with a fan.

The existing perimeter radiation system will be modified to accommodate a 24" raised floor on each trading floor and a 6" raised floor on non-trading floors. The intermediate level of the trading floor where the slab is removed will be provided with a complete new finned tube radiation enclosure to meet architectural requirements.

The present 24 inch condenser water supply and return mains will also be offset down to floor 35 where it will connect to the existing condenser water risers.

One cell of the 5 cell 7500 ton cooling tower on the 46th floor will be repiped to allow exclusive SBI use of this cell. SBI will also use some of the capacity of the remaining cells.

For the emergency generators installed on the fifth floor, the East and West intake plenums shall be fitted with propeller fans to overcome air flow resistance. New louvers on the North face shall accommodate radiator and muffler air discharge.

All Salomon Brothers space on 4th, 3rd and 2nd floors will be served by either relocated DX units from the upper floors or new DX units sized specifically for their intended duty.

II. ELECTRICAL

The Base Building electrical system presently installed in 7 World Trade Center provides six watts per square foot; Salomon's power requirement for lighting and equipment is 14 watts per square foot. An additional Con Edison service and standby generator system is required to support Salomon's loads.

The existing building electrical risers will be utilized to provide power to lights and equipment that do not need to operate in the event of a power failure. Above the 35th floor the risers in electrical closet 'C' and in the mechanical equipment room will be offset and run in SBI's new east electrical closet.

A new set of 4 medium voltage Con Edison feeders will be provided to a new 10 MVA transformer installation to provide the additional power required. The transformer vaults will be located on the fifth floor - north and the installation will be expandable from the initial four (4) 2500 KVA transformers to an ultimate eight transformers.

Standby power will be provided by 1400 KW diesel generators located in the existing generator room and in the remaining space on the fifth floor - north. The initial installation will be seven generators, one of which is redundant, feeding two (2) generator switchboards. The installation will be expandable to ten (10) generators.. A 12,000 gallon diesel fuel tank will provide for twelve (12) hours of full load operation. Eight (8) automatic transfer switches will be served from the new substation and from the generator switchboard.

Standby power risers will be located in two (2) shafts and run express from the fifth to the thirtieth floor. Two (2) plug-in bus ducts for HVAC equipment will run from 30 to the roof in the new mechanical equipment rooms. Two (2) plug-in bus ducts for stand-by lights and receptacles will run from 30 to 47 via the new electric closets; UPS power will be distributed via plug-in bus ducts. Access to express risers will be provided at intervals of fifty (50) feet or less. Express risers outside of SBI space will be protected by fire rated walls.

Two additional electrical closets will be provided on all SBI floors. Space will be provided in the north-west data closet for SBI security risers for the full rise of the building. The fire alarm panels and building automation

system panels will be relocated on floors 35 through 47 to permit the relocation of the mechanical equipment rooms. Additional zones and control points will be provided for SBI fire detection and suppression systems and for HVAC equipment controls. Adequate louvers, outside air and exhaust will be provided for ventilation of transformer vaults, stand-by generators, and UPS battery rooms.

III. PLUMBING

The main sanitary and vent stacks are located outside the core at columns 58, 60, 79 and 81.

Sub-stacks within the core area serve toilets directly from connections to the main stacks at approximately every 10th floor from the 47th floor down.

In order to modify the Base Building sanitary and vent system to suit new SBI facilities, sub-stacks 5A, 6B, 7B and part of 5B will be removed and capped at main stacks S-1, S-2 and S-3.

The domestic water system is supplied from 2 storage tanks on the roof and divided into five zones:

Zone 1 - Floors 3 thru 6

Zone 2 - Floors 7 thru 16

Zone 3 - Floors 17 thru 26

Zone 4 - Floors 27 thru 36

Zone 5 - Floors 37 thru 47

(Zone 5 is equipped with a booster pump.)

Building cooling towers are supplied from the house tanks via a separate booster pump on the 47th floor MER.

All zones are supplied from an eight (8) inch express riser which extends through the building from the house tanks. Each zone is supplied from the lowest level of that zone and is equipped with a pressure reducing valve rig. Each zone has nine (9) sub-risers which directly supply plumbing fixtures at each floor. Hot water is generated at each floor with point of use electric water heaters.

In order to modify the Base Building domestic water system to suit new SBI facilities, Sub-Riser No. 5 and part of Sub-Riser No. 7 will be removed from floors 47 down to 30. All electric domestic water heaters will be removed and capped back to water riser S-9.

Install a new four (4) inch emergency cooling tower make-up riser from the ground floor to the roof. Provide two (2) capped water inlet connections (one on Washington Street side of the building and one on Vesey Street) at the ground floor with a valved riser drain (spill to grade). In the event of a city water main failure, this riser will be supplied with water from tanker trucks.

A new four (4) inch domestic gas service from a street main will be provided and metered on the first floor.

The metered domestic gas riser will be run up through the building plugged outlets provided at the 4th and 45th floor for new SBI kitchen facilities.

IV. FIRE PROTECTION

The Base Building combined standpipe/sprinkler system is supplied from the house tanks by gravity from floors 39 down to 21 and by automatic fire pump for upper floors 47 down to 40.

Floors 1 through 20 are supplied from an automatic fire pump.

No major modification of the existing Base Building combined standpipe sprinkler riser system is required.

The auxiliary fire hose cabinets and valves at standpipe riser F-2H (column 79) at floors 43, 41, 39 and 37 (Part slabs removed for trading floors) will be removed.

The existing sprinkler loop main piping at trading floors will be removed. It will be reinstalled to suit new double story floors and single story mezzanines.

V. VERTICAL TRANSPORTATION SYSTEM

A pair of 48" wide escalators will be provided to serve the 4th floor cafeteria level from the main elevator lobby (3rd Floor). The escalators will operate at 100 fpm and will have 14'-0" rise. The inside and outside deck boards, skirt panels and moldings will be stainless steel with No. 8 mirror finish. The inside paneling shall be clear safety glass with vertical butt joints. The escalator floor pans will be the full width type prepared to receive stone flooring.

Two (2) 2,500 pound capacity underslung geared traction elevators will be provided to serve floors 44, 46 and 47, a total travel of 39'-9". The elevators will operate at 200 fpm, will have 5'-8" wide by 6'-3" deep platforms and will be fitted with 3'-3" wide single speed center opening doors.

A 2,500 pound capacity holeless hydraulic elevator will be used to connect the 3rd floor to the 2nd floor training center. The elevator will operate at 125 fpm and will have a total travel of approximately 13'-0". The platform will be 7'-0" wide by 5'-0" deep and the openings will be the 3'-6" wide single speed center opening type.

A selective vertical conveyor system will be provided to serve all SBI floors. The system will be driven with a continuous chain system, be equipped with automatic load/unload stations and handle mail, document and small supply deliveries. The system will be designed to handle VA type containers and will deliver 10 trays a minute with a payload of 60 pounds per container.

All passenger and service elevator entrances on SBI floors will be raised to accommodate raised flooring. This work will include provision of new sills, cutting down or replacement of transom panels, relocation of hangers and tracks, adjustment of secondary position transducers and modification of controls as required. All hall call buttons will be also raised to conform to the handicapped requirements.

The high rise elevator group will be provided with new stops for the 34th floor. The entrances and associated hall operating fixtures will match the existing units. The existing car stations will be modified to incorporate the additional push button for this stop. The high rise elevator group control system will be reconfigured and arranged to operate the 34th floor as a restricted crossover level, not permitting express service between the 3rd and the 34th floor.

The low rise elevators, PE 3 and 4, will be modified to provide handicapped service between floors 3 and 4. A new key-controlled hall call station will be provided on each of these floors to register a call for this special service.

1. GENERAL REQUIREMENTS

a. Work of this Section shall conform to the requirements of the Contract Documents.

2. DESCRIPTION

a. Elevator work required for this Work is indicated on the Drawings and includes, but is not necessarily limited to the following:

1) Two (2) geared basement underslung passenger elevators.

b. Related work described elsewhere

1) General Conveying Systems Provisions: Section 14010

2) Hoistway, pits, supports for buffers: Section 03300.

3) Protecting hoistway during installation of equipment: Division 1

4) Opening in shaft walls for entrances: Section 09250.

5) Grouting under hoistway door sills: Section 04200

6) Access doors, pit and buffer ladders, gratings: Section 05500.

7) Ventilation for hoistways and machine rooms: Division 15.

8) Installation of power feeders to controller including main fused disconnect switches in machine room: Division 16.

9) Lights and receptacles in machine rooms and pits: Division 16.

10) Hoistway outlets for car lights and life safety system: Division 16.

11) Painting of typical floor hoistway entrances except as otherwise specified: Section 09900.

12) Finished cab flooring.

13) Elevator cabs: Section 14205

3. GENERAL DESCRIPTION

a. Passenger Elevators - PE 1 and 2

1) Quantity - Two (2)

2) Type - Passenger

3) Capacity (lbs) - 2,500

4) Speed (fpm) - 200

5) Travel in feet - 39'-9"

6) Number of Landings - 3 @ 44, 46 & 47

7) Number of Openings - Same as landings

8) Front - All

9) Rear - None

10) Operation - Duplex selective collective

11) Control - Variable voltage

12) Number of push button risers - One (1)

13) Platform size - 5'-8" wide x 6'-3" deep

14) Guide rails - Steel tees at sides with rail backing as required

15) Safeties and Buffers - Car and counterweight safeties and spring buffers

16) Cab - $35,000 net allowance each

17) Car door size - 3'-3" wide by 7'-0" high

18) Hoistway door size - Same as car

19) Door operation - Single speed center opening

20) Fixture and signals - As further specified

21) Machine type - Geared traction

22) Machine Location - Basement underslung

23) Power Supply -460-3-60

4. HOISTWAY EQUIPMENT

a. Guide Rails, Inserts and Brackets:

1) The guide rails shall be accurately machined standard section guide rails with tongue and grooved joints for the car counterweight weighing not less than that specified in the ANSI Code.

2) Machined fishplates shall be used to form the rail joints. Each fishplate shall be so located so as not to interfere with the brackets and clips.

3) When concrete beams, walls, or concrete block walls (over 8 inches thick) are used to support the guide rail brackets, suitable inserts shall be used. Furnish these inserts to be installed under another section of these specifications. Furnish an insert location drawing.

4) Brackets shall be used to support the rails from the hoistway framing and/or inserts. The rails shall be attached to the brackets by heavy clamps or clips. Bolting or welding rails to brackets shall only be allowed in certain instances. Provide rail backing where the vertical distance between support framing is greater than the prescribed ANSI Code limits and no intermediate support framing is shown on the drawing. All guide rails shall be erected plumb and parallel to a maximum deviation of 1/8 inch (plus or minus 1/16 inch.)

b. Buffers:

1) Provide spring type buffers. The buffers shall comply in all respects with the requirements of the ANSI Code. The buffers shall be designed to withstand free-falling loaded car.

2) The buffers shall have been tested by a qualified testing laboratory and approved as complying with the ANSI Code. The buffers marking plate shall indicate the manufacturer's name, identification number and stroke.

c. Normal and Final Terminal Stopping Devices:

1) Normal and final terminal stopping devices shall be provided for the elevator and conforming with ANSI Code requirements.

Terminal stopping devices located in hoistway or on the car and operated by cams shall be fitted with rollers having a rubber or other approved composition tread to provide practically silent operation when actuated by the cam.

2) Upper and lower normal terminal stopping devices shall be provided and arranged to stop the car automatically from any speed obtained under normal operation within the top and bottom overtravels independent of the operating devices, final terminal stopping devices and the buffers.

3) Final terminal stopping devices shall be provided and arranged to stop the car and counterweight automatically from the speed specified within the top clearance and bottom overtravel independent of the operation of the normal terminal stopping device but with the buffers operative. When the final terminal devices operate, normal operation in either direction shall be prevented.

d. Interlocks, Contacts and Unlocking Devices:

1) Each elevator hoistway door shall be equipped with an approved hoistway door interlock. The interlock shall prevent the operation of the elevator driving machine by the normal operating device unless the hoistway door is locked in the closed position (as defined by the ANSI Code), except when the car is in the landing zone and is either stopped or being stopped. The interlocks shall also prevent the opening of a hoistway door from the landing side unless the car is within the landing zone and is either stopped or being stopped at that level. Retiring cams used to actuate interlock shall be securely fastened to car construction and shall be designed to operate without objectionable noise, shock or jar. Interlocks shall be so located that they are not accessible from the landing side when the hoistway doors are closed.

2) Each elevator car door shall be equipped with an approved *electric contact which will prevent the operation of the* elevator driving machine by the normal operating device unless the car door is in the closed position (as defined by the ANSI Code) except when the car is in the landing zone and is either stopped or being stopped. Car door contacts shall be so located that they are not readily accessible from the inside of the car.

3) Car side emergency exit for and car top emergency exit shall be equipped with an electric contact conforming with requirements herein specified for car door contacts.

4) Hoistway door unlocking devices shall be provided as required by the governing code and shall be of the type specified by the *governing code*.

5) All hoistway interlocks, contacts and unlocking devices shall have met all applicable functional and engineering tests required by the ANSI Code and all such equipment shall have been certified by a competent approved laboratory. Results of these tests shall be available upon request.

e. Hoistway and Car Door Hangers:

1) Provide a sheave type two-point suspension hanger and track for each hoistway and car door. Sheaves shall be hardened steel not less than 3 1/4 inches in diameter with grease packed precision ball bearing.

2) The upthrust shall be taken by a roller mounted on the hanger and arranged to ride on the underside of the track.

3) The hanger track shall be of formed cold rolled steel or cold drawn steel and shall be rounded on the track surface to receive the hanger sheaves.

f. Pit Switch:

1) A pit switch causing power to be removed from the driving machine and applying the brake shall be located as to be accessible from the pit access door. Where access to the pits of elevators in multiple hoistways is by means of a single access door, the stop switch for each elevator shall be located adjacent to the nearest point of access to its pit from the access door.

g. Hoistway Entrance Structure:

1) Frames - The frames shall be constructed of 14 gauge furniture steel and shall consist of head and jamb sections with mitered, welded and ground smooth corners forming one-piece unit frames.

2) Door Panels - Each door panel shall be not less than 1 1/4 inch thick and made of not less than No. 16 gauge furniture steel, substantially reinforced with continuous vertical members and contain effective sound deadening material. Each door panel shall be reinforced as required for hangers, interlocks, door closer or operator and keyways. All hoistway

landing doors shall be equipped with non-vision wings of material and finish to match corridor side of door panels.

a) Each section of door shall be provided with two removable laminated plastic composition guides arranged to run in sill grooves with a minimum clearance. The guide mounting shall permit each replacement without removing the door from the hangers.

b) The meeting edge of center opening doors shall be provided with continuous rubber astragal bumper strips. These strips shall be relatively inconspicuous when the doors are closed and shall be easily replaceable. Also, rubber bumpers shall be provided top and bottom of each section of door to stop them at their limit of travel in opening direction.

3) Sills - Provide extruded aluminum sills with the nosing approximately one (1) inch deep and running the full length of door travel. The sills shall be at least 3/8 inch thick. The wearing surface shall be of a non-slip type with the door guide grooves providing a minimum clearance for the gibs.

a) The sills shall be rigidly secured to the building construction by means of steel sill support brackets or blocking with necessary metal shimming or adjustment to jamb and midway between jambs. Where steel building framing is available below sills, the sill supports shall be secured thereto. Where concrete building framing or floor slabs are available below sills, the sill supports shall be secured thereto with expansion anchors.

4) Struts - Struts shall be hot rolled steel not lighter than 8 gauge. Struts shall extend from top of sill to either the bottom of floor beam or intermediate framing above. Struts shall be bolted in place with not less than two (2) bolts at each end. Strut clip angles or brackets shall have a thickness not less than the thickness of the supported strut.

5) Hanger Support - The hanger support shall be formed of 3/16 inch thick plate and shall extend between and be bolted to the vertical steel struts with no less than two (2) bolts at each end.

6) Hanger Covers - The coverplates shall be 14 gauge steel and shall extend the full travel of the doors. Covers shall be made in sections for service access to hangers. The sections above the door opening shall be removable from within the

elevator car. Cover fastening devices shall be non-removable from the cover or hanger cover support.

7) Fascias - Fascia plates shall be 14 gauge steel, extend at least the full width of the door and shall be secured at hanger support at sill with oval head machine screws. Reinforce fascia plates to not allow more than 1/2 inch of deflection.

8) Toe Guards - Toe guards shall be 14 gauge steel and shall be provided to extend 12 inches below any sill not protected by fascia. The toe guards shall extend the full width of the door and shall return to the hoistway wall at 15 degree angle and be firmly fastened.

9) Dust Covers - Dust covers shall be 14 gauge steel and shall be provided to extend 6 inches above any header not protected by fascia. The dust covers shall extend to a full width of travel of the doors, return to the hoistway wall at a 15 degree angle and be firmly fastened.

10) Sight Guards - For all doors provide sight guards finished to match the doors.

11) Entrances - Entrances shall include service or emergency keyways to meet all code requirements.

12) The furniture steel entrances shall have two (2) coats of baked enamel prime paint to be finished under another section of these specifications.

13) All exposed surfaces of struts, hanger supports, covers, fascias, toe guards, dust covers and other ferrous metal provided under this section shall have all oil, dirt and impurities removed and shall be thoroughly cleaned and given a coat of rust inhibitive paint.

14) Set entrances plumb in the hoistway and in alignment with the guide rails completely independent of the surrounding walls with the exception of the hoistway doors, and set prior to the erection of the walls.

15) Set sills and anchor to the adjacent construction, into the recess provided. Installed sills shall be level, plumb, and in perfect alignment with the bottom door guides.

16) Protect finished surfaces at all times during delivery, storage and installation. Finishes which become marred,

scratched, abraded, chipped, or otherwise not acceptable to the Architect or the Owner shall be repaired and/or replaced as directed.

5. CAR EQUIPMENT

a. Top of Car Operating Device:

1) An inspection and maintenance station shall be mounted on top of the elevator cab. This station shall contain up and down direction buttons and an emergency stop button. This station may be fixed to the car crosshead or may be portable provided the extension cord is permanently attached to the car crosshead. The car will be operated by constant pressure on the appropriate directional button. Provisions shall be made to make the normal operating devices inoperative while this device is in use. (See "Main Car Station" section of specifications).

b. Guide Shoes:

1) Roller guide shoes shall be furnished, securely bolted to the car and counterweight frame at top and bottom. Each roller guide shall consist of a set of three sound-reducing wheels in precision type ball bearings and held in contact with the rail surfaces by means of adjustable cushioning devices. Roller guides shall run on dry lubricated guide rails.

c. Car Frame and Platform:

1) The car frame shall be made of steel members, with a factor of safety as required by the ANSI Code. The safety device shall be mounted under the car and securely fastened to the car frame of all cars.

2) The car platform shall consist of a steel frame with necessary steel stringers all securely welded together. The frame and platform shall be so braced and reinforced that no strain will be transmitted to the elevator car.

a) Platform shall be provided with steel sub-floor.

3) Provide extruded aluminum thresholds for the elevators. The thresholds shall have non-slip surface with guide grooves.

4) Finished Flooring: Carpet provided under another section of the specifications.

5) The platforms of all cars shall be sound isolated. The support frame shall carry rubber pads on which the platforms shall rest without any connection to the steel frame. Rubber pads shall effectively isolate the cab that is braced to the frame. All auxiliary apparatus shall be substantially supported.

d. Hoistway and Car Door Operation:

1) Power operated hoistway and car doors shall open automatically. Smooth premature door opening as the car approaches a landing shall be a requirement. Premature door opening shall occur within the landing zone and shall be arranged to open, as described in the ANSI Code, when the car is at rest or substantially level with the landing. The doors shall remain open until a car call is registered, a time delay expires or the light beam is interrupted.

2) The doors shall be arranged to close automatically a definite time after the car stops. This time shall be adjustable. The closing speed shall be approximately one foot per second with a force not exceeding that specified in the ANSI Code. Registering of a car call shall normally permit the doors to immediately begin closing, unless modified by the control or light ray system.

3) The doors shall re-open if:

a) The corridor button at which the car is standing is pressed.

b) The "Door Open" button is pressed.

c) The protective device mounted on the landing edge of the car door meets an obstruction.

d) The light ray is interrupted.

e. Car and Hoistway Door Operators:

1) A master electric power door operator shall be furnished and installed on the elevator car. This operator shall be designed to operate the car and hoistway door simultaneously.

2) The door shall be designed to operate at an average opening speed of 2 feet per second. This type of operator shall be designated as a high speed operator. Automatic closing of the car and hoistway doors shall be required and the closing speed

shall be approximately 1 foot per second. This closing speed shall be reduced as required to limit the kinetic energy of the closing doors to the values permitted by the ANSI Code.

3) The doors shall operate smoothly without a slam in both the opening and closing direction. They shall be cushioned in their final movement in both directions of travel either by individual dash pots or by other equally effective approved methods. Electrical power shall be used to open and close doors.

4) Hoistway door shall be provided with door closers arranged to close automatically if the car for any reason leaves the landing zone. Spirators shall be used.

5) In case of interruption or failure of electric power from any cause, the door operating mechanism shall be so designed that it shall instantly permit emergency manual operation of both the car door and the hoistway door, and the hoistway door shall continue during emergency operation to be self-locking, and self-closing. The door operator shall operate in conjunction with or be equipped with all interlocks and safety contacts specified.

6) All door operating levers shall be constructed of heavy steel members. All pivot points shall have either ball or roller bearings, or bronze bushed bearings, of ample size. All brackets and other supports required to support door operating mechanism shall be furnished and installed.

7) The door operators shall be adjustable to allow for adjustment of the premature door opening time within the landing zone. The amount of time the door remains open shall be controlled through the door operator or through an electric beam device (as further specified).

f. Hoist and Governor Cables:

1) Only iron (low-carbon steel) or steel wire ropes, have the commercial classification "Elevator Wire Rope", or wire rope specifically constructed for elevator use shall be used for car and counterweight suspension. The factor of safety shall be as specified for the speed in the ANSI Code. The hoisting rope data shall be in the "Crosshead Data Plate" and on the "Rope Data Tag". The hoist ropes shall be shackled and secured by the method outlined by the ANSI Code.

2) The governor ropes shall be of regular lay construction and

shall be not less than 3/8 inch in diameter. The two ends shall be securely fastened together at the car and shall be attached to the safety operating mechanism. The governor cable shall pass over the governor sheave and under a tension device at the bottom of the hoistway.

g. *Safety and Governors:*

1) The car shall be provided with a governor actuated mechanical safety device mounted under the car platform and securely bolted to the car sling. The car safety shall conform with the ANSI Code identification and classification of car safety devices.

a) Each type of car safety shall be actuated by a centrifugally operated speed governor (upon a predetermined speed downward from any cause) in such a manner as to grip both sides of each guide rail with substantially the same compressive force and thus stop and hold the car. The safety mechanism when tripped shall engage the rails with sufficient force to stop the car from governor tripping speed with a fully loaded car. The pressure of the two pairs of safety jaws shall be equalized.

b) The safety shall be designed so that the jaws will engage the rails in no more than 30 inches of car travel after the governor jaws grip the governor rope. The safety shall gradually and smoothly bring the car to a stop from governor tripping speed with an average rate of retardation within the limits given the ANSI Code for the capacity.

c) Car safety marking plate shall be of corrosion resistant metal and in addition to the data required by the ANSI Code, shall indicate the manufacturer's name and manufacturer's catalog designation number for safety.

d) Suitable provisions shall be made to release the car safety. In no event shall the safety be released by downward motion of the car but raising the car to reset the safety shall be allowed.

2) The car safety shall be operated by a speed governor located over head, driven by a governor rope suitably connected to the governor rope releasing carrier. The proper tension in the governor rope shall be maintained by a weighted tension sheave located in the pit. The governor shall be equipped with rope

grip jaws designed to clamp the governor rope so as to actuate the car safety upon a predetermined overspeed downward. The governor shall be set at an overspeed not less than 115% of specified rated car speed and not more than the maximum governor tripping speed specified in the ANSI Code for the specified rated car speed. The rope grips jaws must be positively tripped within the permitted range of speeds. Rope grip jaws directly coupled to the governor mechanism so as to float with governor movement will not be permitted. Centrifugal type governors shall trip and set rope jaws within 60 degrees of governor sheave rotation after reaching rated tripping speed.

a) The governor rope tripping device shall be so designed that no appreciable damage to or deformation of the governor rope shall result from the stopping action the device in operating the car safety. The governor overspeed switches shall conform with the ANSI Code requirements and be so located and enclosed that excess lubricant will not enter the switch enclosure. The governor shall be accurately adjusted and sealed with the tripping speed specified and as specified in the ANSI Code.

h. Counterweight:

1) Counterweights shall be designed for smooth and economical operation, and shall consist of a steel frame welded or securely fastened together by bolts and necessary sub-weights. These sub-weights shall be held within the frame by not less than 2 tie rods passing through holes in all weights. The rods shall be equipped with locknuts secured by washers and cotter pins at each end.

a) The counterweight shall be equal to the weight of the elevator car and approximately 40% of the contract (specified) capacity.

2) Provide a governor actuated mechanical safety device under the counterweight. The safety device shall conform to the ANSI requirements.

i. Governor Overspeed Protective Device:

1) A governor overspeed protective device shall be furnished on speed governors and operated by this governor's over speed when the type of safety used and the speed are as described.

2) The car switch, when operated, shall remove power from the driving machine motor and brake before the application of the safety. The car shall stop at the next available landing. The setting for the overspeed switches shall be as prescribed in the ANSI Code.

6. CONTROL EQUIPMENT AND FEATURES

a. Wiring and Conduit:

1) All necessary wiring for the proper operation of the equipment, beginning at the power and light outlets as outlined in "Related Work Described Elsewhere" shall be installed under this contract and shall conform to the requirements of New York City Electrical Code.

2) Traveling cables shall be so suspended, anchored and run that the strain on individual cable conductors will be reduced to a minimum, connections to terminal blocks will be free from all strain, and the cables will always be free from contact with the hoistway construction, car or other equipment.

3) The outer cable covering must remain intact between junction boxes and, abrupt bending of the cable producing distortion will not be permitted. Traveling cables shall be of the best grade possible for this type of service. They must be hung so that the proper size loop is obtained. The outer braid shall be fire resistant and meet Underwriters standard test. Ten (10) percent spares shall be mounted in all traveling cables.

4) All conductors shall be run in rigid steel conduit or metal wireways and shall be installed in an orderly manner. Flexible metal conduit may be used for short runs between such equipment and risers and limit switches, interlocks, pushbutton boxes, etc., and between controllers and machine motors, machine brakes and motor generator sets.

5) All wiring must test free from short circuits or grounds and the insulation resistance between conductors, and conductors and ground, shall be at least one megaohm.

b. Duplex Selective Collective Operation:

1) The operation shall be duplex selective collective with the two cars arranged to operate from a single riser of hall stations.

2) When there is no demand for elevator service, one car shall

park at the lobby floor and the other shall be a "free car" parking at the floor last served. Both cars shall park with doors closed. The "free car" shall normally respond to any registered hall calls except:

a) A hall call registered at the lobby floor shall be answered by the car parked at the lobby floor.

3) When the car parked at the lobby floor responds to a registered car call for a floor above the lobby floor, the idle "free car" shall be dispatched automatically to the lobby floor, and shall become the assigned lobby floor parking car.

4) When the "free car" is responding to registered calls, the lobby floor parking car shall start automatically to assist the "free car" under any of the following conditions:

a) Registration of hall call below the "free car" while it is traveling in the up direction.

b) Registration of hall call above the "free car" while it is traveling in the down direction.

c) Inability of the "free car" to move in response to a registered call within a predetermined time.

5) When both cars are responding to car and hall calls, the first car to complete its call shall become the assigned lobby floor parking car and shall be dispatched automatically to the lobby floor.

6) If either car is removed from service, the other car shall respond to all registered hall calls and its own car calls.

c. Independent Service:

1) The elevator control system shall be arranged for independent service. Each car operating panel shall be provided with a key operated switch which, when closed, shall permit the car to by-pass all corridor calls, and permit dispatching of the car directly to any floor by pressing the corresponding car button. The doors shall not close until a car button is pressed or until the key operated switch is opened. When a car is on independent service, any other cars shall operate as a collective or group automatic system serving all corridor calls and their own car calls. Upon opening of the independent service station, normal service shall resume.

d. Automatic By-Pass:

1) A load weighing device shall be provided which shall be actuated by the load in the car. Normal activation shall be when the elevator is 70% loaded. When the load weighing device is actuated at the main terminal floor by incoming persons, the car shall immediately dispatch. A loaded car shall continue to by-pass corridor calls as long as it is loaded.

e. Emergency Control for Fire Department Use:

1) Install this system in accordance with local laws and requirements.

2) Emergency operation shall be actuated by the operation of the two-position (Normal, Firemen Service) key operated switches.

3) Emergency system, when actuated, shall operate as follows:

a) Elevators shall return nonstop and park at the designated floors with doors open.

b) If an elevator is traveling away from the designated floor, the elevator shall stop and reverse direction at the next available floor and return non-stop to the designated floor or, if standing at a floor other than the designated floor, the elevator shall return nonstop to the designated floor. The doors of an elevator standing at the designated floor shall open and remain open.

4) A keyed switch, located in the car operating station, when actuated, shall place the elevator on emergency operation. Elevators shall respond to car calls only. Closing of doors shall be initiated by momentary pressure of a car floor button. Elevator shall travel to designated floor and doors shall open by continuous pressure on the "Door Open" button. If the "Door Open" button is released before doors are fully open, the doors shall reclose. Once fully open, doors shall remain open until another car floor button is pressed. Provide a button to cancel registered car calls.

5) The keyed switch located in the designated floors, when returned to the "Normal" position, shall cause elevators, except those operating on emergency service, to return to normal operation. This operation shall be allowed only when the elevator is at the designated floor.

7. MACHINE ROOM EQUIPMENT

a. Hoisting Motors:

1) The motor shall be of the direct current type, fully reversible with the necessary high starting torque and low starting current. The motor shall be ruggedly designed with all parts capable of meeting the severe requirements of elevator service.

2) All motors shall be rated in accordance with the standards of the AIEE for 50 degree C, 30-minute rated motors. The motor shall have the capacity to operate the elevator with rated contact load at rated speed without overheating. The speed of the motor, when operated with the controller, shall not vary more than 10% of the rated speed under all loads in the capacity range.

b. Controller and Selector:

1) The controller shall be designed to give service as herein specified. The controller shall be the electromagnetic type with switches mounted on panels supported by a steel frame. The controller shall be designed to control the starting, acceleration, deceleration and stopping of the elevator and to prevent damage to the motor from overload or excessive current. The controller shall automatically cut off the power supply, apply the brake and bring the car to rest in response to the operation of any of the safety devices. A relay shall be provided, as required, designed to prevent the operation of the elevator in case of phase reversal, phase failure or low voltage in the power supply.

2) A selector shall be provided which will perform all functions incidental to the control system which relate to the position and movement of the car in the hoistway.

3) All controller wiring shall be neatly formed and tied. The wiring on the back of the panel shall be of the flame-resistant type. The terminals are to have suitable indelible means of identification to facilitate testing and repair. The identification markings shall be coordinated with identical marking used on the wiring diagrams. All leads, except the control and signal circuits, shall be provided with either solder or solderless lugs. Control and signal wires shall be brought to accessible washer type or soldered terminals or studs.

4) The elevator shall be equipped with a leveling device which, when a stop is initiated within a definite range of distances in advance of a floor, will bring the car automatically to a stop at floor level regardless of load or direction of travel. The device shall correct overtravel and undertravel.

c. Machine Beams:

1) Provide all necessary structural steel beams or other steel members required for the support of elevator machine, sheave, rope hitches, governors, buffers, grating, etc., and other elevator equipment. Bearing plates and anchors as required for beam mounting shall also be provided.

d. Geared Elevator Hoisting Machine:

1) The geared traction machine shall be designed to meet the severe service encountered in elevator operation. A properly grooved sheave shall be driven through a worm and gear by a moderate speed motor. The sheave wheel shall be mounted with heavy anti-friction bearings on rigid shaft, or shall be firmly pressed onto a shaft supported by a sleeve or anti-friction of ample capacity.

2) The bedplate shall be of cast iron or steel in one piece either separate, or integral with the machine frame. The gear housing, brake support and motor support shall be mounted on the machine, rigid bedplate or they shall be a single casting. This gear case shall have gasketed hand holes to permit inspection of worm gear face worm gear and worm contact, and worm gear mounting bolts. The complete assembly shall be so arranged to effectively prevent oil leakage from the gear case and worm shaft opening. The machine shall be mounted in compact sound-proofing units to attenuate the predominant frequency of the elevator system.

3) The sheave and gear spider shall be cast integral or may be pressed on and keyed to the shaft. The worm gear shall have an accurately machined bronze rim or such a composition that it will not show appreciable wear after one year. The worm gear shall be securely bolted to the spider. The sheave material shall be of hard alloy cast iron, semi-steel or cast steel or approved composition, with true running, smooth turned grooves and flanges. These sheaves shall be tested until proven free from cracks, sand holes or other imperfections. A Brinnell hardness exceeding 220 is required.

4) The worm shall be accurately machined in one place from a solid steel forging or heat treated steel bar stock and be integral with the worm shaft. The worm shaft shall be mounted on at least two bearings; one of which shall be an oversized double active pre-loaded ball bearing, or a self-aligned thrust bearing. The other shall be a bronze sleeved guide bearing. All thrust bearings shall be removable without dismantling the machine.

5) The brake drum shall be securely mounted on the work shaft and machined to obtain a smooth and accurate face. The drum shall be carefully balanced and have the wearing edge and surface of the flange turned smooth to run true to .005 of an inch. The brake shall be spring actuated, electrically released, or have construction and have a proper braking area for the load and speed. The two brake shoes shall be spring operated by separate springs. The springs shall have sufficient power to stop and hold the elevator at 125% of contract load.

e. Motor Generator:

1) Generator field control system shall consist of an individual motor generator with a remote control starter and controller so arranged that the system shall, during accelerating and retarding periods, apply graduated voltage to the armature of elevator hoisting motor by varying the field strength of the generator. The system must accomplish this gradual voltage change automatically and without interruption of power. The system shall provide smooth and practically uniform acceleration and retardation which shall be obtained entirely magnetically and entirely independent of the operator or car load, even though car operating device may be improperly operated to the extent of being thrown quickly from full speed up to full speed down or vice versa.

2) The motor generator shall be compact in design with all units mounted on the same rigid cast iron or structural steel bedplate or mounted in a unit frame with supporting feet. The armature of motor and the generator shall be mounted on a single forged steel shaft and the entire assembly shall be statically and dynamically balanced.

3) The motor generator set shall be designed for high efficiency and low power consumption especially when running with elevator motor stopped. It must run quietly and be practically free from vibration. The commutation must be sparkless when running at full speed and under full load, and there shall be not more than barely visible sparking when

accelerating or retarding with a load in the car ranging between the car with operator only up to the specified contract load.

4) The motor generator shall be rated in accordance with the AIEE Standards for 50 degrees C. continuous sets.

5) The motor generator set bearings shall be either of the anti-friction bearing metal sleeve type with oil reservoirs, automatic self-lubrication, oil gauges, capped filler openings and drains, or of the ball or roller type arranged for grease lubrication and fitted with grease gun connections and drain plugs, or of the pre-lubricated sealed double shielded ball bearing type. The bearings and lubricant reservoirs shall be virtually dust tight and shall incorporate effective lubricant seals or other means to prevent lubricant leakage.

6) The motor generator set shall be mounted on an approved vibration isolating foundation which will effectively prevent transmission of vibration to the building structure. The foundation vibration isolation units may be either steel banded natural cork or machinery cork board pads, rubber pads or rubber in shear units sized and located to produce a uniform optimum loading on the isolation units.

7) Automatic starting and stopping of the motor generator set is required by a method of operation. The control system shall be equipped with an adjustable timing device which shall automatically shut down the motor generator set at predetermined times after the elevator has answered the last registered call. The subsequent pressing of a car or corridor button shall automatically start the motor generator set. The timing device shall permit adjustment of time interval over a range of from 10 second to 3 minutes.

8) The motor generator starting panel shall be constructed similar to the controller with all equipment including wiring similarly installed. The starter may be separate from or incorporated in the controller. The starter shall be fully magnetically operated reduced voltage type, including the necessary accelerating and running switches, starting resistance or Wye-delta switching, and overcurrent protection.

f. Automatic Leveling and Releveling Devices:

1. The elevators shall be equipped with a floor leveling device which shall automatically bring the car to a stop within 1/4" of floor for which a stop has been initiated, regardless of

load or direction of travel. An automatic re-leveling device shall be provided which shall be arranged to automatically return the elevator to the floor in the event that elevator should creep down a predetermined distance below floor level. This device shall be operative at all floors serviced, whether the hoistway door or car gate is open or closed, or whether the emergency stop switch has been thrown, provided there is no interruption of the power to the elevator.

g. Performance Requirements:

1) Elevators shall be adjusted to meet these performance requirements:

a) 10.0 seconds (plus or minus) floor-to-floor time between typical floors. This time will be recorded from the doors start to close on one floor until they are 3/4 open at the next floor.

b) Door operating times:

- Opening - 1.6 seconds

- Closing - 2.4 seconds

- Non-Interference - (stop for car call) - adjustable to ten seconds; set to four (4) seconds

- Second passenger (stop for corridor calls) - 2.5 seconds

- Third passenger (stop for corridor calls) - 1.3 seconds

- Second passenger (stop for car calls) - 1.0 seconds

8. FIXTURES

a. Main Car Station:

1) The main car station shall contain a series of pushbuttons to correspond to the landing served. The buttons shall become individually illuminated as a button for the desired floor is pressed. These lights shall be extinguished as the call is answered. It shall also contain a red emergency stop switch which shall be arranged to interrupt the power supply to the motor and apply to the brake independently of the operating

buttons. Activation of this switch shall not cancel registered car or corridor calls, and after the switch is released, the car shall continue to answer its registered calls. Also included shall be a key operated car light switch and an alarm button connected to a bell outside the hoistway.

2) Also required shall be a fan or blower switch, a door open button and an inspection switch to make normal operation inoperative for the purpose of using the hoistway access switches and allow use of the top-of-car operation station. The fan or blower switch shall have a minimum of two speeds "LOW" and "HIGH", or as many as required and hereinbefore specified. The fan shall exhaust at 650 cfm at low speed and 900 cfm at high speed.

3) The main car station shall match the stations used on the tower passenger elevators.

b. Car Position Indicator:

1) Provide a LED type position indicator to indicate to the passengers the location of the car in the hoistway. Changes from one designation to another shall be instantaneous and shall be accomplished approximately midway between floors. The position indicator shall be mounted above the car station.

c. Corridor Push Button Stations:

1) Provide up and down buttons at intermediate landings and a single button at terminal landings. Provide call registered light for all buttons. These lights shall extinguish as the calls are answered.

2) Provide fire department and motor generator key switch in the 44th floor corridor push button stations.

d. Hall Lanterns:

1) Next to the corridor entrance on each floor, a hall lantern shall be provided to indicate which car shall stop in response to the corridor call and indicate the direction that the car is traveling. The lantern shall remain illuminated until the doors close.

2) The lantern shall have a 3" diameter solid sandblasted plastic lens.

3) A multi-stroke gong shall be incorporated in the lantern fixture to sound as the lantern is illuminated to call the attention of the waiting passengers.

e. Work Lights and Receptacles:

1) A single 110 volt lighting receptacle shall be installed in each car in an inconspicuous location.

2) Provide work lights and receptacles at top and bottom of elevator car. Provide lights with wire guards and local switch.

f. Fixture Attachment, Finish and Design:

1) Where no special design is shown, the fixtures, faceplates, push buttons, graphics and finishes shall match the tower passenger elevators.

2) Mount fixtures with tamperproof screws. The screw and key switch cylinder finishes shall match faceplate finish.

g. Electronic Door Control:

1) An electronic door control unit shall be provided as required in connection with automatic elevator operation and power operated elevator doors. This unit shall consist of a photoelectric and light source devices located on the hoistway side of the car doors. Two (2) paralleled light rays shall project across the elevator entrance.

2) The interruption of the light rays shall re-adjust the normal present door open time causing:

a) The doors to remain open as long as the rays are interrupted.

b) The closing of the doors a short interval after light rays are re-established the reversal and reopening of doors if the light rays are interrupted while the doors are closing.

3) The time interval for door closing after the re-establishment of the light rays shall be adjustable.

4) If, for any reason, the doors are held open for an extended time (approximately 15 seconds) by a passenger continually standing in the entrance holding the door open, the door shall begin to close at a reduced speed with a gentle nudging force. During the nudging operation a distinctive buzzer will sound. Nudging will be effective until the doors are fully closed.

5) A switch shall be provided in the car operation panel which shall permit disconnecting this electronic unit, when desired.

h. Reopening Device:

1) All passenger and service elevators with electric power operated doors and using an automatic method of elevator operation shall have an automatic reopening device on the car door so arranged that, in the event the door either approaches or meets an obstruction in closing, the car door and the hoistway door shall automatically stop and reopen. The device shall be so designed and adjusted as to minimize the possibility of injury to passengers. The device shall not project into hoistway door opening when the doors are in the fully open position.

i. Handicapped Requirements:

1) Locate door reopening devices at 5 to 29 inches above finish floor.

2) Locate the alarm button and emergency stop switch at 35 inches, and floor and control button not more than 54 inches.

3) Provide raised markings adjacent to the floor and control buttons on a contrasting color background to the left of the buttons. Letter and numbers shall be minimum of 5/8 inch and raised .03 inch. The markings shall match the tower passenger elevator markings.

4) The centerline of the hall push button station shall be 42" above the floor.

5) Car riding lanterns shall sound once for the "up" direction and twice for the "down" direction.

6) Provide floor designations at each entrance on both sides of jamb at a height of 60" above the floor. Designations shall match the tower passenger elevator designations.

7) Provide an audible signal to tell passenger that the car is stopping or passing a floor served by the elevator. Audible signal shall be activated by a button in car operating panel.

j. Intercommunication System:

1) Provide a car station in the car and connect to the existing

intercommunication system provided for the tower elevators.

2) Provide all wire, conduit, fittings, etc., for complete operating system.

k. Emergency Lighting Fixture:

1) Provide a self-powered emergency light unit in the elevator car. The unit shall include a power pack and shall use two (2) incandescent light fixtures. Provide all necessary wiring and controls to allow the use of standard cab fixtures as an emergency lighting fixture.

a) The power pack shall contain a nickel cadmium battery and a charger.

b) Unit shall provide illumination for at least four (4) hours.

2) The operation shall be completely automatic upon failure of normal power supply. Unit shall be connected to normal power supply for car lights and arranged to be energized at all times. After use, battery shall be recharged automatically.

3) The fixture shall be equipped with milk white lens and be flush mounted in the main car station.

9. CAR ENCLOSURES

a. It is understood that if the selected manufacturer of the cab is not the same as the Elevator Supplier, all cab material will be constructed in a manner to accommodate the elevator manufacturer's associated equipment such as operators, hangers, interlocks, etc., as purchased by the Owner or his Agent.

b. The net allowance for the elevator cabs are to be exclusive of any handling charge, applicable sales and/or use taxes, car door hangers, interlocks, exit contact locks, platform, flooring, car door sill, car installation or any operating equipment, and such items are to be included by the Elevator Supplier in the base contract.

c. The net allowance covering the elevator cars of a design and material as selected shall include ventilation, lighting doors, base wainscoting, handrails, entrance columns, transoms as required, all necessary cutouts and other cab associated appurtenances that may be designed.

d. The Owner or his authorized representative reserves the right to deduct the net allowances from the Elevator Contract and to purchase the elevator cabs separately. He also retains the right to assign this purchase to the Elevator Supplier for coordination and receive the necessary credits or make the installation by an authorized representative of the Architect and/or Owner.

10. ALTERNATES

a. Alternate No. 14212-1:

1) Submit separate prices for a full maintenance service for all the elevators included in the Specifications, based on a five (5) year contract in accordance with the following:

a) The service agreement shall commence at the termination of the maintenance period included in the base Specifications and shall continue for a period of five (5) years thereafter. Either party may terminate this agreement either at the end of the first five years or at the end of any subsequent year by giving the other party ninety (90) days written notice.

b) The maintenance work shall be performed by elevator men directly employed and supervised by the manufacturer and installer of the equipment who are experienced and skilled in maintaining Automatic Group Control Elevators similar to those to be maintained under this agreement.

c) Except for emergency minor adjustment call-back service, all work shall be performed during the regular working hours of regular working days of the Trade. If, at any time, it should become necessary, and only when so authorized by the Owner to perform any portion of the work other than emergency call-back service during overtime hours, the maintenance contractor shall be reimbursed at the established billing rates for the difference between regular and overtime labor.

d) Maintenance contractor shall maintain all parts of the elevators consisting of, but not limited to, machines, motors, generators, brushes, controllers, selectors, worms, gears, thrusts, bearings, brake magnet coils, brake shoes, windings, rotating elements, contacts, coils and resistances for operating and motor control circuits, magnet frames, leveling devices, cams, car and hoistway door hangers, tracks and guides, door operating devices, hall lanterns and all other elevator operating, signal

and accessory equipment complete.

2) The maintenance work shall consist of the following:

a) Supplying, repairing and replacing of all parts of every description made necessary by wear and tear at the maintenance contractor's cost. Only parts that are correctly designed and suitable in all respects shall be used. The maintenance contractor shall have and maintain on hand locally a supply of spare parts sufficient for the normal maintenance and repair of the equipment. The following items of elevator equipment are excluded: Car enclosures, hoistway enclosures, hoistway doors, door frames and sills, fluorescent light bulbs.

b) Examining and equalizing tension of all hoisting ropes. Renewing of all hoisting ropes, including governor ropes whenever necessary to insure maintenance of an adequate safety factor. Repairing and/or replacing all electrical wiring and conductors extending to the elevator from the main line switch or circuit breaker. Mainline switch fuses are excluded.

c) Keeping the guide rails clean and properly lubricated, except when roller type guides are involved no rail lubrication shall be used. When necessary, the maintenance contractor shall renew guide shoe gibs or rollers as required to insure smooth and quiet operation. All oil reservoirs shall be kept properly sealed to prevent leakage.

d) Keeping the exterior of the machinery and any other parts of the equipment subject to rust properly painted and presentable at all times. The motor windings and controller coils are to be periodically treated with proper insulating compound.

3) The maintenance contractor shall not be required to make renewals or repairs necessitated by reason of negligence or misuse of the equipment by persons other than the maintenance contractor, his representatives and employees, or by reason of any other cause beyond the control of the maintenance contractor, except ordinary wear and tear. The maintenance contractor shall not be required under this agreement to install new attachment as may be recommended or directed by insurance companies or Governmental Authorities.

4) This service shall be performed solely by the manufacturer and

installer of the equipment and shall not be assigned or transferred to any agent of subcontractor.

5) The maintenance contractor shall make an annual test of governors and safeties.

6) The price shall be subject to adjustment each year as follows:

a) The material portion of the price shall be increased or decreased by the percentage of increase or decrease shown by the index of "Wholesale Commodity Prices for Metals and Metal Products" published by the U.S. Department of Labor, Bureau of Statistics, for the month within which falls the anniversary of the commencement of the service as compared with the index for the month as of the date of this contract.

b) The labor portion of the price shall be increased or decreased by the percentage of increase or decrease in the straight time hourly cost for the month within which falls the anniversary of the commencement of the service as compared with such straight time hourly labor cost on the date of the Contract.

b. Alternate No. 14212-2:

1) Alternate No. 14212-2 - State the amount to be deducted from the base bid if the elevators are substituted by holeless hydraulic passenger elevators as follows:

a) Capacity (lbs.) - 2,500

b) Speed (fpm) - 150

c) Travel in feet - 39'-9"

d) Number of landings - 3 @ 44, 46 & 47

e) Number of openings - Same as landings

f) Front - All

g) Rear - None

h) Operation - Duplex selective collective

i) Control - AC for hydraulic operation

j) Number of push button risers - One (1)

k) Platform size - 6'-0" wide x 6'-0" deep

l) Guide Rails - Steel tees at sides with rail backing as required

m) Buffer - Spring

n) Cab - $20,000 net allowance each

o) Car Door Size - 3'-3" wide by 7'-0" high

p) Hoistway door size - Same as car

q) Door Operation - Single speed center opening

r) Fixture and Signals - Same as the traction elevators

s) Machine type and location - oil hydraulic on the 43rd floor

t) Power Supply - 480-3-60

11. INSPECTION

a. Study the Contract Documents with regard to the work as shown and required so as to insure its completeness.

b. Examine surface and conditions to which this work is to be attached or applied, and notify the Architect in writing, if conditions or surfaces are detrimental to the proper and expeditious installation of the work. Starting the work shall imply acceptance of the surfaces and conditions to perform the work as specified.

c. Verify, by measurements at the job site, dimensions affecting the work. Bring field dimensions which are at variance with those on the accepted shop drawings to the attention of the Construction Manager. Obtain the decision regarding corrective measures before the start of fabrication of items affected.

d. Cooperate in the coordination and scheduling of the work of this section with the work of other sections so as not to delay job progress.

12. INSTALLATION

a. Install the elevators with skilled workmen in strict accordance with the accepted shop drawings and other submittals.

b. Comply with the code, manufacturer's instructions and recommendations.

c. Coordinate work with the work of other trades for proper time and sequence to avoid construction delays and to insure right-of-way of system. Use lines and levels to ensure dimensional coordination of the work.

d. Accurately and rigidly secure supporting elements within the shaftways to the encountered construction, within the tolerance established.

e. Provide and install motors, switches, controls, safety and maintenance, operating devices in strict accordance with the submitted wiring diagrams and applicable codes and regulations having jurisdiction.

f. After installation touch up in the field surfaces of shop primed elements which have become scratched or damaged.

g. Lubricate operating parts of system as recommended by the manufacturer.

13. PROTECTION AND CLEANING

a. During shipment and installation, adequately protect surfaces against accumulation of paint, mortar, mastic and disfiguration or discoloration, and damage.

b. Upon completion, remove protection and thoroughly clean work and have it free from discoloration, scratches, dents and other surface defects.

c. The finished installation shall be free of defects. Before final completion and acceptance of the building, repair and/or replace defective work, to the satisfaction of the Architect and the Owner at no additional cost.

END OF SECTION

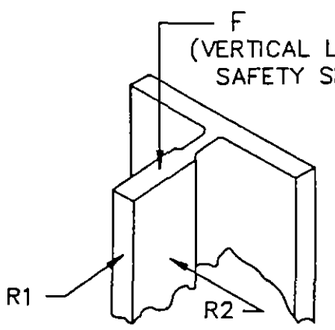

RAIL LOAD DIAGRAM

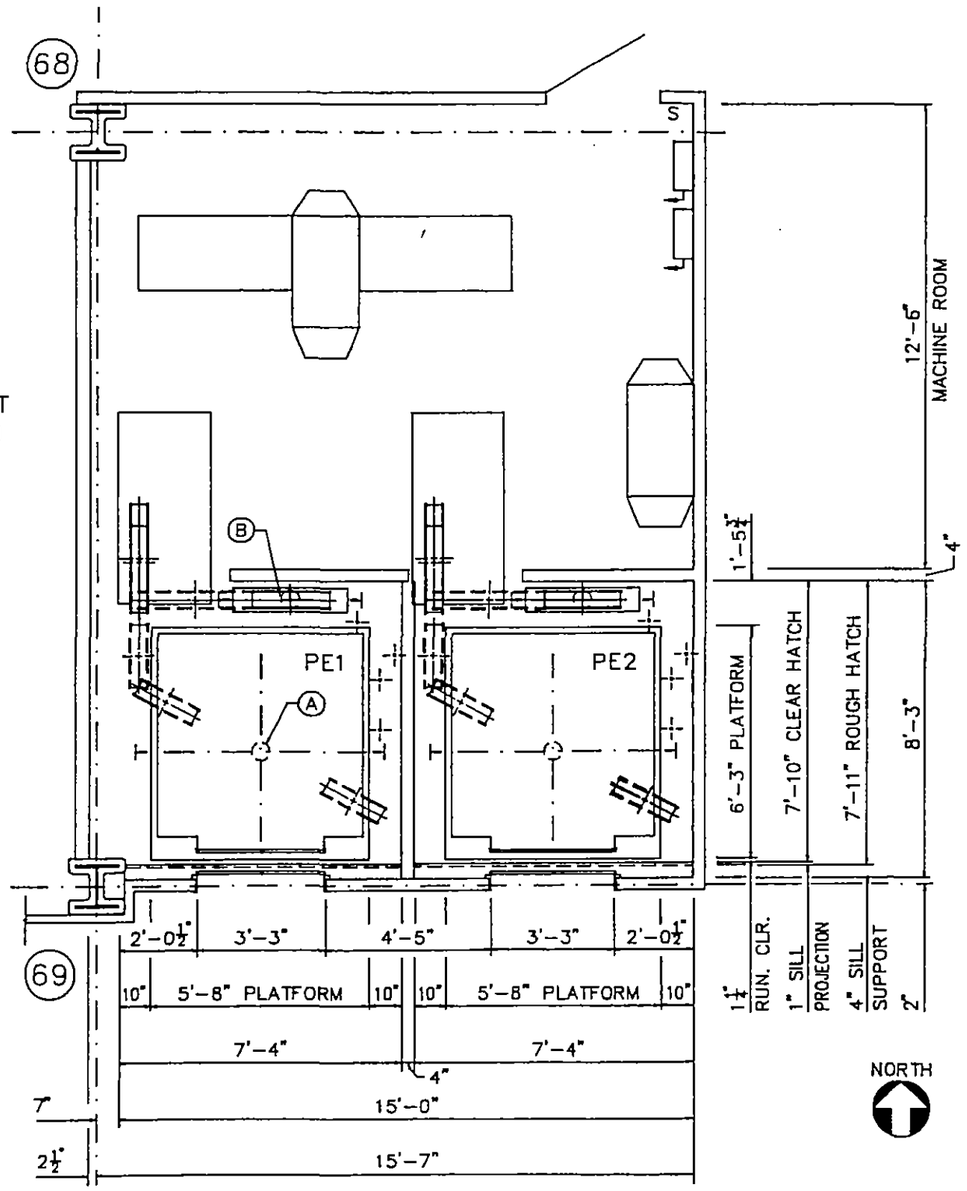

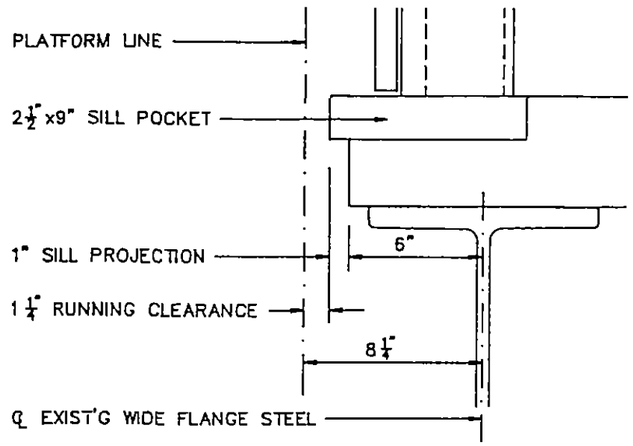

SILL SUPPORT DETAIL
NOT TO SCALE

PIT LOADS

CAR BUFFER REACTION	A	42.0K
CWT BUFFER REACTION	B	36.0K
UP PULL ON MACHINE	C	38.2K
RAIL LOADS PER RAIL	F_{CAR}	24.2K
	F_{CWT}	17.6K
	R1	450#
	R2	125#

PASSENGER ELEVATORS
PE1 & PE2
2500# @ 200 FPM

John A. Van Deusen
& Associates Inc.

Building Transportation
Systems Consultants

5 Regent Street - Suite 524
Livingston, N.J 07039-1617
201-994-9220/212-772-0128

PROJECT: SALOMON BROTHERS

TITLE: HATCH PLAN

SCALE: 1/4"=1'-0"	DRAWN BY:	DRAWING NUMBER:
DATE: 09-13-88	AT/ght	1513HP2A

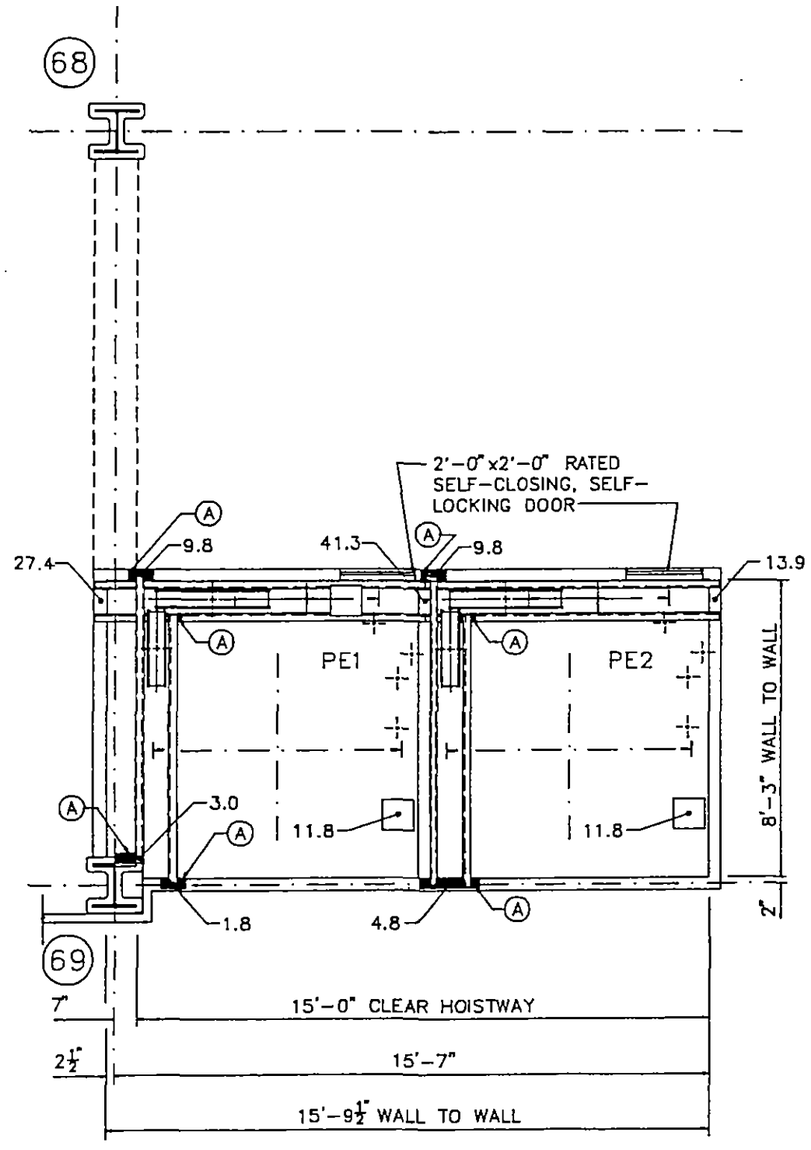

NOTE A:

BLOCKING AS NECESSARY.

NORTH

PASSENGER ELEVATORS
PE1 & PE2.
2500# @ 200 FPM

John A. Van Deusen & Associates Inc.
Building Transportation Systems Consultants
5 Regent Street - Suite 524
Livingston, N.J. 07039-1617
201-994-9220/212-772-0128

PROJECT: SALOMON BROTHERS

TITLE: OVERHEAD SHEAVE PLAN

SCALE: 1/4"=1'-0" | DRAWN BY: AT/ght | DRAWING NUMBER: 1513SP2A

DATE: 09-14-88

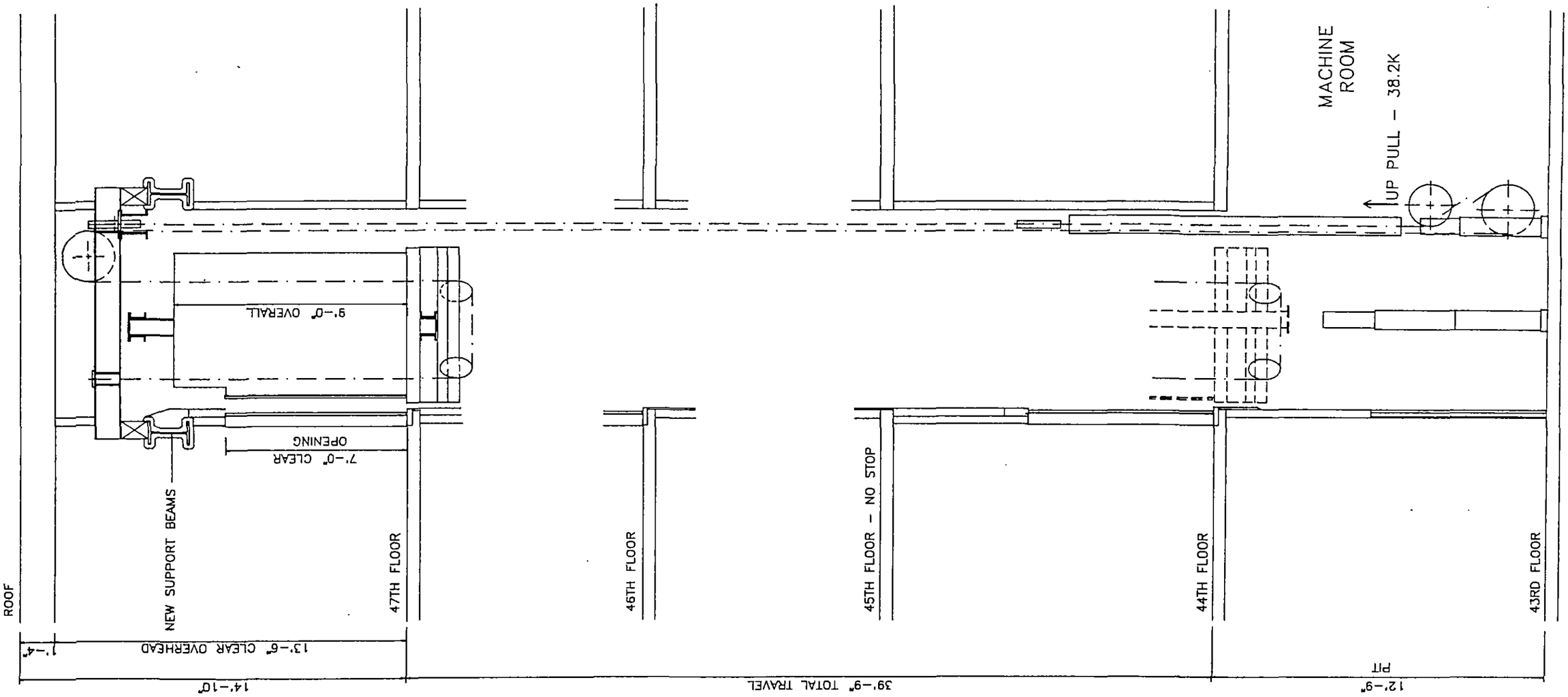

PASSENGER ELEVATORS
PE1 & PE2
2500# @ 200 FPM

John A. Van Deusen
& Associates Inc.
Building Transportation
Systems Consultants
5 Regent Street - Suite 524
Livingston, N.J. 07039-1617
201-994-9220/212-772-0128

PROJECT: SALOMON BROTHERS

TITLE: SECTION VIEW

SCALE: 1/4"=1'-0"	DRAWN BY:	DRAWING NUMBER.
DATE: 09-13-88	AT/ght	1513S2A

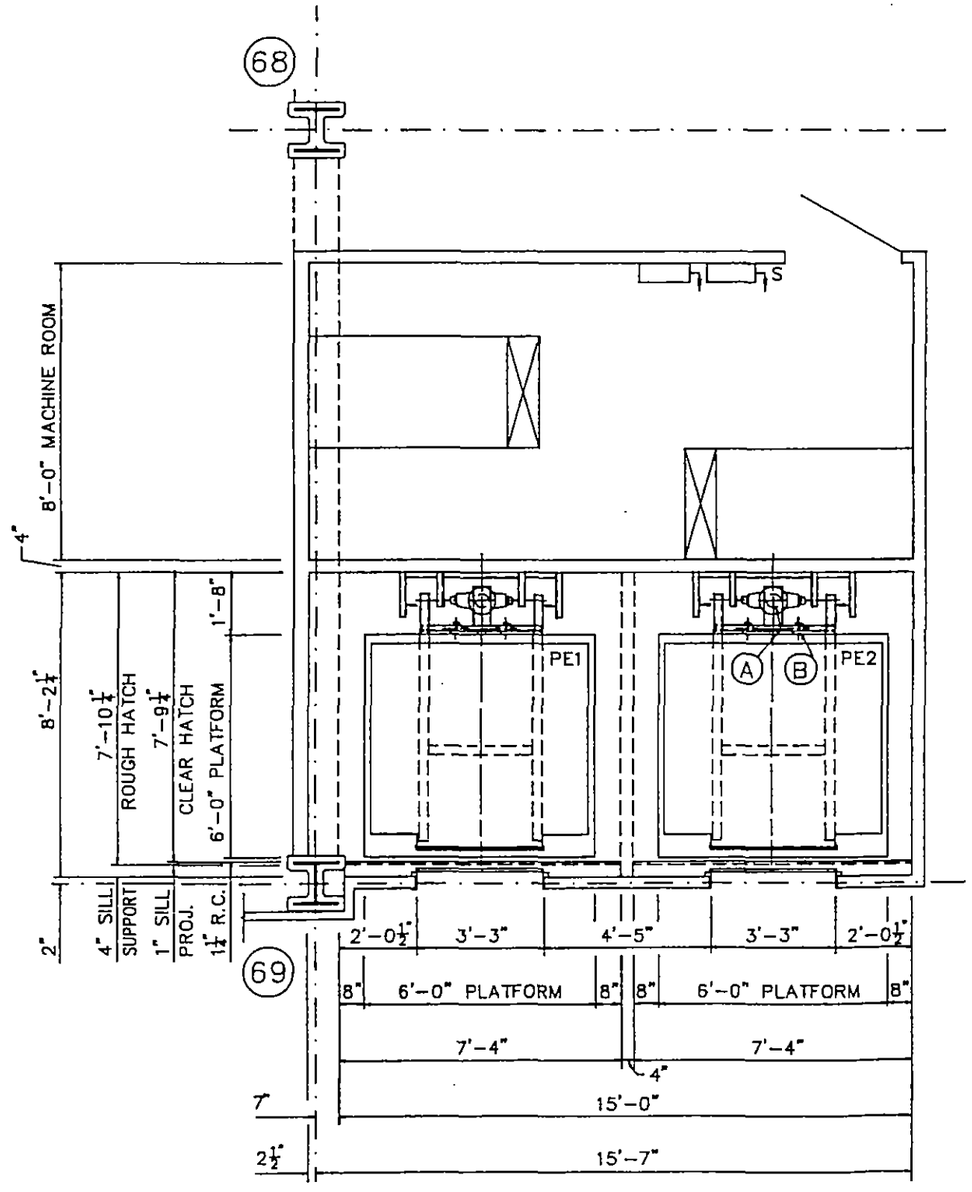

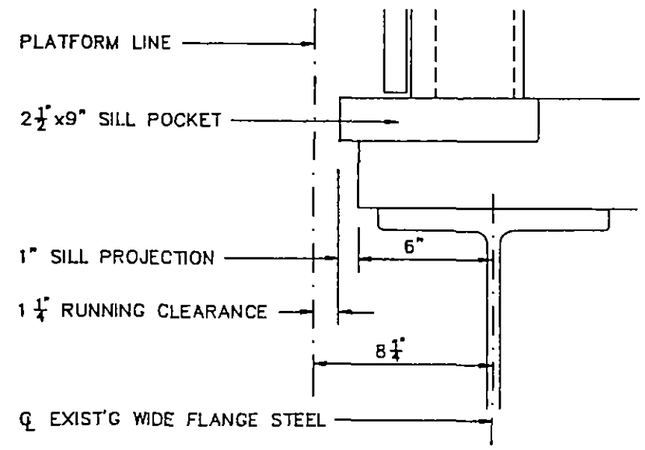

SILL SUPPORT DETAIL
NOT TO SCALE

PIT LOADS

A	15.54K ON HYDRAULIC JACK
B	8.25K ON EACH BUFFER

NORTH

HOLELESS HYDRAULIC
PASSENGER ELEVATORS – PE1 & PE2
2500# @ 150 FPM

John A Van Deusen
& Associates Inc.
Building Transportation
Systems Consultants
5 Regent Street - Suite 524
Livingston, N.J 07039-1617
201-994-9220/212-772-0128

PROJECT: SALOMON BROTHERS

TITLE: HATCH, PIT, AND MACHINE ROOM PLANS

SCALE: 1/4"=1'-0" | DRAWN BY: AT/ght | DRAWING NUMBER: 1513HP2B

DATE: 09-13-88

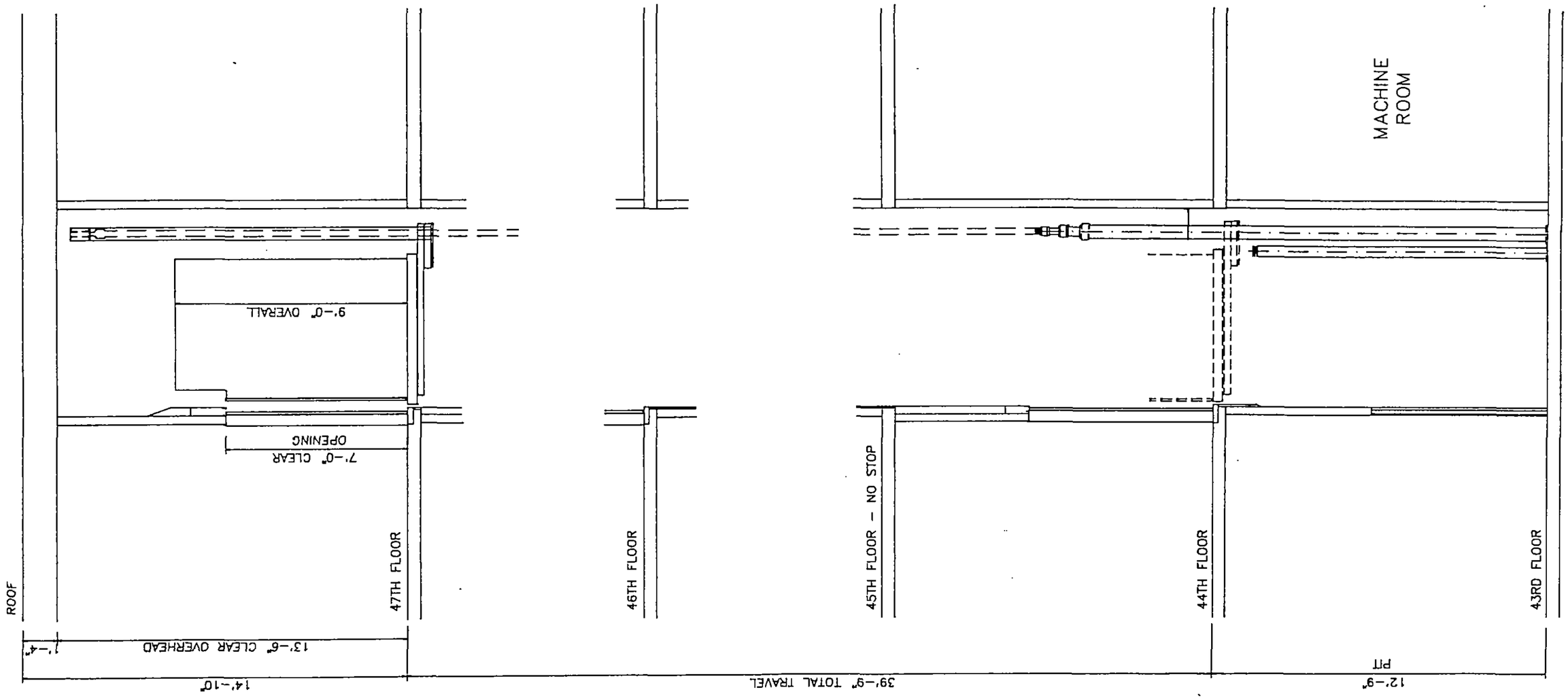

HOLELESS HYDRAULIC
PASSENGER ELEVATORS – PE1 & PE2
2500# @ 150 FPM

John A. Van Deusen & Associates Inc.
Building Transportation Systems Consultants
5 Regent Street - Suite 524
Livingston, N.J. 07039-1617
201-994-9220/212-772-0128

PROJECT: SALOMON BROTHERS

TITLE: SECTION VIEW

SCALE: 1/4"=1'-0"	DRAWN BY:	DRAWING NUMBER:
DATE: 09-13-88	AT/ght	1513S2B

1. GENERAL REQUIREMENTS

a. Work of this Section shall conform to the requirements of the Contract Documents.

2. DESCRIPTION

a. Elevator work required for this work is indicated on the drawings and includes, but is not necessarily limited to, the following:

1. One (1) holeless hydraulic passenger elevator.

b. Related Work Specified Elsewhere:

1) General Conveying Systems Provisions: 14010.

2) Hoistway, pits, supports for buffers and jack units: Section 03300.

3) Protecting hoistway during installation of equipment: Division 1

4) Opening in shaft walls for entrances: Section 09250.

5) Grouting under hoistway door sills: Section 04200

6) Cutting and patching: Division 1.

7) Access doors, pit and buffer ladders, gratings: Section 05500.

8) Ventilation for hoistways and machine rooms: Division 15.

9) Installation of power feeders to controller including main line switches in machine room: Division 16.

10) Lights and receptacles in machine rooms and pits: Division 16.

11) Hoistway outlets for car lights and life safety system: Division 16.

12) Carpet flooring

13) Elevator Cabs: Section 14205

3. GENERAL DESCRIPTION

a. Holeless Hydraulic Passenger Elevator - HE 32

1) Quantity - One (1)

2) Type - Passenger

3) Capacity - (lbs.) - 2,500

4) Speed (fpm) - 125

5) Travel in feet - 12'-11 1/2"

6) Number of Landings - 2

7) Number of Openings - 2

8) Front - 1 @ 2nd floor

9) Rear - 1 @ 3rd floor

10) Operation - Simplex Selective Collective

11) Control - AC for hydraulic operation

12) Number of push button risers - One (1)

13) Platform size - 7'-0" wide by 5'-0" deep

14) Guide rails - Steel tees

15) Buffers - Spring

16) Cab - $25,000 net allowance

17) Car door size - 3-6" wide by 7'-0" high

18) Hoistway door size - Same as car

19) Door operation - Single speed center opening

20) Fixture and signals - As further specified

21) Pump type - for oil hydraulic operation

22) Pump location - Remote at 2nd floor

23) Power Supply - 460-3-60

4. HOISTWAY EQUIPMENT

a. Guide Rails, Inserts and Brackets:

1) The guide rails shall be accurately machined standard section guide rails with tongue and grooved joints for the car counterweight weighing not less than that specified in the ANSI Code.

2) Machined fishplates shall be used to form the rail joints. Each fishplate shall be so located so as not to interfere with the brackets and clips.

3) When concrete beams, walls, or concrete block walls (over 8 inches thick) are used to support the guide rail brackets, suitable inserts shall be used. Furnish these inserts to be installed under another section of these specifications. Furnish an insert location drawing.

4) Brackets shall be used to support the rails from the hoistway framing and/or inserts. The rails shall be attached to the brackets by heavy clamps or clips. Bolting or welding rails to brackets shall only be allowed in certain instances. Provide rail backing where the vertical distance between support framing is greater than the prescribed ANSI Code limits and no intermediate support framing is shown on the drawing. All guide rails shall be erected plumb and parallel to a maximum deviation of 1/8 inch (plus or minus 1/16 inch.) Where required, cut metal deck and/or flashing to install brackets.

b. Buffers:

1) Provide spring type buffers. The buffers shall comply in all respects with the requirements of the ANSI Code. The buffers shall be designed to withstand free-falling loaded car.

2) The buffers shall have been tested by a qualified testing laboratory and approved as complying with the ANSI Code. The buffers marking plate shall indicate the manufacturer's name, identification number and stroke.

c. Normal Terminal Stopping Devices:

1) Normal terminal stopping devices shall be provided for the

elevator and conforming with ANSI Code requirements. Terminal stopping devices located in hoistway or on the car and operated by cams shall be fitted with rollers having a rubber or other approved composition tread to provide practically silent operation when actuated by the cam.

2) Upper and lower normal terminal stopping devices shall be provided and arranged to stop the car automatically from any speed obtained under normal operation within the top and bottom over travels independent of the operation device, final terminal stopping device and the buffers.

d. Interlocks, Contacts and Unlocking Devices:

1) Each elevator hoistway door shall be equipped with an approved hoistway door interlock. The interlock shall prevent the operation of the elevator driving machine by the normal operating device unless the hoistway door is locked in the closed position (as defined by the ANSI Code), except when the car is in the landing zone and is either stopped or being stopped. The interlocks shall also prevent the opening of a hoistway door from the landing side unless the car is within the landing zone and is either stopped or being stopped at that level. Retiring cams used to actuate interlock shall be securely fastened to car construction and shall be designed to operate without objectionable noise, shock or jar shall be so located that they are not accessible from the landing side when the hoistway doors are closed.

2) Each elevator car door shall be equipped with an approved electric contact which will prevent the operation of the elevator driving machine by the normal operating device unless the car door is in the closed position (as defined by the ANSI Code) except when the car is in the landing zone and is either stopped or being stopped. Car door contacts shall be so located that they are not readily accessible from the inside of the car.

3) Hoistway door unlocking devices shall be provided as required by the governing code.

4) All hoistway interlocks, contacts and unlocking devices shall have met all applicable functional and engineering tests required by the ANSI Code and all such equipment shall have been certified by a competent approved laboratory. Results of these tests shall be available upon request.

e. Pit Switch:

1) A pit switch causing power to be removed from the driving machine and applying the brake shall be located next to the pit access ladder.

f. Hoistway Entrances:

1) Frames - The frames shall be constructed of 14 gauge furniture grade steel and shall consist of head and jamb sections with mitered, welded and ground smooth corners forming a one-piece unit frame.

2) Door Panels - Each door panel shall be not less than 1 1/4" thick and made of not less than No. 16 gauge steel substantially reinforced with continuous vertical members and contain effective sound deadening material. Each door panel shall be reinforced as required for hangers, interlocks, door closer or operator and keyways. All hoistway landing doors shall be equipped with full height non-vision wings of material and finish to match corridor side of door panels.

a) Each section of door shall be provided with two removable laminated plastic composition guides arranged to run in sill grooves with a minimum clearance. The guide mounting shall permit each replacement without removing the door from the hangers.

b) The meeting edge of center opening doors shall be provided with continuous rubber astragal bumper strips. These strips shall be relatively inconspicuous when the doors are closed and shall be easily replaceable. Also, rubber bumpers shall be provided top and bottom of each section of door to stop them at their limit of travel in opening direction.

3) Sills - Provide extruded aluminum sills on all floors. The sills nosing shall be approximately one (1) inch deep and run the full length of door travel. The sills shall be at least 3/8" thick. The wearing surface shall be of a non-slip type with the door guide grooves providing a minimum clearance for the gibs.

a) The sills shall be rigidly secured to the building construction by means of steel sill support brackets or blocking with necessary metal shimming or adjustment to jamb and midway between jambs. The support brackets

shall be attached to a No. 12 gauge continuous plate located on steel deck sections. Where steel building framing or floor slabs are available below sills, the sill supports shall be secured thereto with expansion anchors.

4) Struts - Struts shall be hot rolled steel angles not lighter than 8 gauge. Struts shall extend from top of sill to either the bottom of floor beam or intermediate framing above. Struts shall be bolted in place with not less than two (2) bolts at each end. Strut clip angles or brackets shall have a thickness not less than the thickness of the supported strut.

5) Hanger Support - The hanger support shall be formed of 3/16" thick steel plate and shall extend between and be bolted to the vertical steel struts with no less than two (2) bolts at each end.

6) Hanger Covers - The coverplates shall be 14 gauge steel and shall extend the full travel of the doors. Covers shall be made in sections for service access to hangers. The sections above the door opening shall be removable from within the elevator car. Cover fastening devices shall be non-removable from the cover or hanger cover support.

7) Fascias - Fascia plates shall be 14 gauge steel, extend at least the full width of the door and shall be secured at hanger support at sill oval head machine screws. Reinforce fascia plates to not allow more than 1/2" of deflection.

8) Provide fascia plates where the clearance between the edge of the loading side of the platform and the inside face of the hoistway enclosure exceeds the code allowed clearance.

9) Toe Guards - Toe guards shall be 14 gauge steel and shall be provided to extend 12" below any sill not protected by fascia. The toe guards shall extend the full width of the door and shall return to the hoistway wall at a 15 degree angle and be firmly fastened.

10) Dust Covers - Dust covers shall be 14 gauge steel and shall be provided to extend 6" above any header not protected by fascia. The dust covers shall extend to a full width of travel of the doors, return to the hoistway wall at a 15 degree angle and be firmly fastened.

11) Sight Guards - For all doors provide sight guards finished to match the doors.

12) Entrances - Entrances shall include service or emergency keyways to meet local code requirements.

13) The furniture steel entrances shall have two (2) coats of baked enamel prime paint to be finished under another section of these specifications.

14) All exposed surfaces of struts, hanger supports, covers, fascias, toe guards, dust covers and other ferrous metal provided under this section shall have oil, dirt and impurities removed and shall be thoroughly cleaned and given a coat of rust inhibitive paint.

15) Set entrances plumb in the hoistway and in alignment with the guide rails completely independent of the surrounding walls with the exception of the hoistway doors, and set prior to the erection of the walls.

16) Set sills and anchor to the adjacent construction, into the recess provided. Installed sills shall be level, plumb, and in perfect alignment with the bottom door guides.

17) Protect finished surfaces at all times during delivery, storage and installation. Finishes, which become marred, scratched, abraded, chipped, or otherwise not acceptable to the Architect or the Owner, shall be repaired and/or replaced as directed.

5. CAR EQUIPMENT

a. Top of Car Operating Device:

1) An inspection and maintenance station shall be mounted on top of the elevator cab. This station shall contain up and down direction buttons and an emergency stop button. This station may be fixed to the car crosshead or may be portable provided the extension cord is permanently attached to the car crosshead. The car will be operated by constant pressure on the appropriate directional button. Provisions shall be made to make the normal operating devices inoperative while this device is in use. (See "Main Car Station" section of specifications).

b. Guide Shoes:

1) The guide shoes shall be cast iron. Removable Textalite liners shall be used. The guide shoes shall be securely

fastened to the top and bottom of the stiles. Guides shall run on dry unlubricated rails.

c. Car Frame and Platform:

1) The car frame shall be made of steel members, with a factor of safety as required by the ANSI Code.

2) The car platform shall consist of a steel frame with necessary steel stringers all securely welded together. The frame and platform shall be so braced and reinforced that no strain will be transmitted to the elevator car.

a) Platform shall be provided with steel sub-floor.

3) Provide an extruded aluminum threshold for the elevator. The threshold shall have non-slip surface with guide grooves.

4) Finished flooring: Carpet provided under another section of the specification.

d. Hoistway and Car Door Operation:

1) Power operated hoistway and car doors shall open automatically. Smooth premature door opening as the car approaches a landing shall be a requirement. Premature door opening shall occur within the landing zone and shall be arranged to open, as described in the ANSI Code, when the car is at rest or substantially level with the landing. The doors shall remain open until a car is registered, a time delay expires or the light beam, if specified, is interrupted.

2) The doors shall be arranged to close automatically definite time after the car stops. This time shall be adjustable. The closing speed shall be approximately one foot per second with a force not exceeding that specified in the ANSI Code. Registering of a car call shall normally permit the doors to immediately begin closing, unless modified by the control or light ray system.

3) The doors shall reopen if:

a) The corridor button at which the car is standing is pressed.

b) The "Door Open" button is pressed.

c) The protective device mounted on the landing edge of the

car door meets an obstruction.

d) The light ray is interrupted.

e. Car and Hoistway Door Operators:

1) A master electric power door operator shall be furnished and installed on the elevator car. This operator shall be designed to operate the car and hoistway door simultaneously.

2) The door shall be designed to operate at an average opening speed of 2 feet per second. This type of operator shall be designated as a high speed operator. Automatic closing of the car and hoistway doors shall be required and the closing speed shall be approximately 1 foot per second. This closing speed shall be reduced as required to limit the kinetic energy of the closing doors to the values permitted by the ANSI Code.

3) The doors shall operate smoothly without a slam in both the opening and closing direction. They shall be cushioned in their final movement in both directions of travel either by individual dash pots or by other equally effective approved methods. Electrical power shall be used to open and close doors.

4) Hoistway door shall be provided with door closers arranged to close and open automatically if the car for any reason leaves the landing zone. Spirators shall be used.

5) In case of interruption or failure of electric power from any cause, the door operating mechanism shall be so designed that it shall instantly permit emergency manual operation of both the car door and the hoistway door, and the hoistway door shall continue during emergency operation to be self-locking, and self-closing. The door operator shall operate in conjunction with or be equipped with all interlocks and safety contacts specified.

6) All door operating levers shall be constructed of steel members. All pivot points shall have either ball or roller bearings, or bronze bushed bearings. All brackets and other supports required to support door operating mechanism shall be furnished and installed.

7) The door operators shall be adjustable to allow for adjustment of the premature door opening time within the landing zone. The amount of time the door remains open shall be controlled through the door operator or through an electric beam device

(as further specified).

f. Hoist and Car Door Hangers:

1) Provide a sheave type two-point suspension hanger and track for each hoistway and car door. Sheaves shall be hardened steel not less than 1 1/4 inches in diameter with grease packed precision ball bearing.

2) The upthrust shall be taken by a roller mounted on the hanger and arranged to ride on the underside of the track.

3) The hanger track shall be of formed cold rolled steel or cold drawn steel and shall be rounded on the track surface to receive the hanger sheaves.

4) The sheave wheels or the hanger tracks shall be provided with a suitable sound reducing material to eliminate metal to metal contact.

6. CONTROL EQUIPMENT AND FEATURES

a. Wiring and Conduit:

1) All necessary wiring for the proper operation of the equipment, beginning at the power and light outlets as outlined in "Related Work Specified Elsewhere" shall conform to the requirements of the N.Y.C. Electrical Code.

2) Traveling cables shall be so suspended, anchored and run that the strain on individual cable conductors will be reduced to a minimum, connections to terminal blocks will be free from all strain, and the cables will always be free from contact with the hoistway construction, car or other equipment.

3) The outer cable covering must remain intact between junction boxes and, abrupt bending of the cable producing distortion will not be permitted. Traveling cables shall be of the best grade possible for this type of service. They must be hung so that the proper size loop is obtained. The outer braid shall be fire resistant and meet Underwriters standard test.

4) All conductors shall be run in steel conduit or metal wireways. Flexible metal conduit may be used for short runs between such equipment and risers and limit switches, interlocks, push button boxes, etc., and between controllers and pump motors.

5) All wiring must test free from short circuits or grounds and the insulation resistance between conductors, and conductors and ground, shall be at least one megaohm.

b. Elevator Operation:

1) The operation shall be simplex selective collective.

2) The operating devices for selective collective automatic elevator operation shall consist of a car operating panel in the car containing a series of car dispatch push buttons corresponding to the various landings served, riser or landing button fixtures with single call buttons at terminal landings, all electrically connected to controller switches governing floor selection, direction of travel, acceleration and retardation to provide the operation as hereinafter specified.

3) The car shall normally park with its doors closed at the 3rd floor.

4) Pressure of a corridor button at the floor at which the car is parked shall cause the doors of the car to open. When a passenger enters the car and presses a car button, the car shall start as soon as the door interlocks circuit is established. When a corridor button is pressed at the floor where a car is not parked, the car shall start in answer to the call.

c. Controller and Selector:

1) The controller shall be designed to give service as herein specified. The controller shall be the electromagnetic type with switches mounted on panels supported by a steel frame. The controller shall be designed to control the starting acceleration, deceleration and stopping of the elevator and to prevent damage to the motor from overload or excessive current. The controller shall automatically cut off the power supply, apply the brake and bring the car to rest in response to the operation of any of the safety devices. A relay shall be provided, as required, designed to prevent the operation of the elevator in case of phase reversal, phase failure or low voltage in the power supply.

2) A selector shall be provided which will perform all functions incidental to the control system which relate to the position and movement of the car in the hoistway.

3) All controller wiring shall be neatly formed and tied. The

wiring on the back of the panel shall be of the flame-resistant type. The terminals are to have suitable indelible means of identification to facilitate testing and repair. The identification markings shall be coordinated with identical markings used on the wiring diagrams. All leads, except the control and signal circuits, shall be provided with either solder or solderless lugs. Control and signal wires shall be brought to accessible washer type or soldered terminals or studs.

d. Automatic Leveling and Releveling Devices:

1) The elevators shall be equipped with a floor leveling device which shall automatically bring the car to a stop within 1/4" of floor with any floor for which a stop has been initiated, regardless of load or direction of travel. An automatic re-leveling device shall be provided which shall be arranged to automatically return the elevator to the floor in the event the elevator should creep down a predetermined distance below floor level. This device shall be operative at all floors served, whether the emergency stop switch has been thrown, provided there is no interruption of power to the elevator.

7. MACHINE ROOM EQUIPMENT

a. Hoisting Motor:

1) The motor shall be of the alternating current induction type, designed to meet the severe requirements of hydraulic elevator operation. The motor shall be designed to develop high starting torque with low starting current as required by the elevator duty.

2) All motors shall be rated in accordance with the standards of the AIEE for 50 degree C, 30-minute rated motors. The motor shall have the capacity to operate the elevator with rated contact load at rated speed without overheating. The speed of the motor, when operated with the controller, shall not vary more than 10% of the rated speed under all loads in the capacity range.

b. Power Unit:

1) The power unit shall be compactly and neatly designed as a self-contained unit and shall include: a structural steel outer base including rank supports; an oil tight drip pan; a floating inner base so that there is no metallic contact for mounting the motor pump assembly; sound isolation panels to

enclose the unit and reduce airborne noises. Provide neoprene sound isolation pads under the unit.

2) A reinforced overhead oil reservoir with a tight fitting tank shall be provided over the oil control unit. Included in the reservoir shall be an oil fill strainer with air filter and oil level gauge assembly, and a self-cleaning strainer in the suction line.

3) The pump shall be especially designed and manufactured for oil hydraulic elevator service. It shall be of the positive displacement screw type inherently designed for steady discharge with a minimum pulsation and will give smooth quiet operation.

4) The drive shall be multiple V-Belts and sheaves. The number and size of the sheaves shall be determined by the speed and capacity specified.

5) The oil control unit shall be of the manufacturer's own design but shall include the following valves:

   a) The Relief Valve (hydraulic overload protection) shall be capable of by-passing the total oil flow without increasing back pressure more than 10 percent above the required to barely open the valve.

   b) The Safety Check Valve shall be designed to close quietly without permitting any perceptible reverse flow. It shall be designed to support the elevator on a positive locked column of oil when a car is at rest.

   c) The Up-Start Valve shall be externally adjustable, and shall be designed to by-pass oil flow during initial start of the motor-pump assembly. The valve shall close slowly gradually diverting oil to the jack unit insuring smooth up starts, and to relieve load on the motor during starting.

   d) The Slow Down Valve for up releveling shall be externally adjustable and shall be designed to gradually by-pass oil flow during transition from fast speed to slow speed and into up leveling.

   e) The Up-Stop valve shall be externally adjustable, and shall be designed to fully by-pass the oil flow when the car reaches exact landing level to insure smooth up stops and to compensate for fly-wheel action.

f) The Lowering Valve an Leveling Valve shall be externally adjustable for drop away speed, lowering speed, leveling speed and stopping speed to insure smooth down starts and stops. Floor leveling shall be within 1/4 inch plus or minus.

g) The Manual Lowering Valve shall be designed for manual lowering of the elevator car in event of power failure and for use in servicing and adjusting the elevator mechanism.

h) The Tank Shut-Off Valve shall be designed for isolating oil in the power unit tank to insure each of the servicing and adjusting the elevator mechanism without removing oil from the tank.

i) All valves shall be accessible for adjustment. All adjustment shall be made without removing the assembly from the oil line.

6) Self-cleaning strainers shall be provided to prevent foreign material from the oil reservoirs entering the pump and oil control system.

c. Piping:

1) Provide all necessary pipes and fittings to connect the power unit to the jack unit in accordance with the requirements of Section II of the ANSI Code. Use sound isolated mounting brackets for the installation of oil line.

d. System Protective Devices:

1) The electrical control circuit shall be designed as to prevent operation failure of the elevator car because of certain possible malfunctions during operation and to also prevent damage to the elevator equipment by shutting down the system before damage can occur.

2) It shall be so arranged that if a malfunction should occur, due to motor starter failure, oil becoming low in the system or the car failing to elevator reach a landing the the up direction within a predetermined time, the elevator car will automatically decent to the lowest terminal landing. If power-operated doors are used, the doors will automatically open when the reaches the landing to allow passengers to depart. The doors will then automatically close and all

control buttons, except the "door open" button in the car station shall be made inoperative.

3) The malfunction should then be corrected and the elevator placed back in service through the main line disconnect switch.

e. Sound Reducing Protection:

1) Sound insulating panels manufactured of reinforced 16 gauge steel panels with a 1 inch thick 1-1/2 pound core of fiberglass affixed to interior shall be mounted on all four open sides of the power unit frame to isolate airborne noise from motor-pump assembly.

2) Sound isolating couplings, a minimum of two, shall be installed in the oil line in the machine room between pump and jack. Each coupling shall consist of two (2) machined flanges separated by two (2) neoprene seals to absorb vibration and to positively prevent metal to metal contact in the oil line. Coupling shall be designed and manufactured in such a manner that they will be blow-out proof.

3) An oil-hydraulic muffler shall be installed in oil line near power unit. It shall contain pulsation absorbing inspecting interior parts without removing unit from oil line. Rubber hose without blow-out proof features will not be acceptable.

4) Vibration pads shall be mounted under the power unit assembly to isolate the unit from the building structure.

f. Jack Units:

1) Provide dual jack system for the elevator. The jack unit shall be designed and constructed in accordance with the applicable requirements of the ANSI Code. It shall be of sufficient size to lift the gross load to height specified and shall be factory tested to insure adequate strength and freedom from leakage. No brittle material, such as grey cast iron, shall be used in the jack construction.

2) The jack unit shall consist of the following parts: a plunger of heavy seamless steel tubing accurately turned and polished; a stop ring shall be electrically welded to the plunger to positively prevent plunger leaving its cylinder; an internal Babbitt-lined, guide bearing; packing or seal of suitable design and quality; a drip ring around cylinder top; a cylinder made of steel pipe and provided with a pipe connection and air bleeder. Brackets shall be welded to the

jack cylinder for supporting the elevator on pit channels. Provide all required steadying channels for the jack units.

g. Main Line Strainer:

1) A main line strainer of self-cleaning type, equipped with a 40 mesh element shall be furnished and installed in the oil line. The unit shall be designed for 400 psi working pressure and shall be of a compact design.

8. FIXTURES

a. Main Car Station:

1) The main car station shall contain a series of push buttons to correspond to the landing served. The buttons shall become individually illuminated as a button for the desired floor is pressed. These lights shall be extinguished as the call is answered. It shall also contain a red emergency stop switch which shall be arranged to interrupt the power supply to the motor and apply to the brake independently of the operating buttons. Activation of this switch shall not cancel registered car or corridor calls, and after the switch is released, the car shall continue to answer its registered calls. Also included shall be a car light switch and an alarm button connected to a bell outside the hoistway.

2) Also required shall be a fan or blower switch, a door open button and an inspection switch to make normal operation inoperative for the purpose of using the hoistway access switches and allow use of the top-of-car operation station. The fan or blower switch shall have a minimum of two speeds "LOW" and "HIGH", or as many as required and hereinbefore specified. The fan shall exhaust at 650 cfm at low speed and 900 cfm at high speed.

3) The main car station shall match the stations used on the tower passenger elevators and shall be located as shown on the drawings.

b. Car Position Indicator:

1) Provide a LED type position indicator to indicate to the passengers the location of the car in the hoistway. Changes from one designation to another shall be instantaneous and shall be accomplished approximately midway between floors. The position indicator shall be mounted above the car station.

c. Corridor Push Button Stations:

1) Provide single button fixtures at terminal landings. The buttons shall have call registered lights. These lights shall extinguish as the calls are answered.

d. Hall Lanterns:

1) Next to the corridor entrance on each floor, a hall lantern shall be provided to indicate which car shall stop in response to the corridor call and indicate the direction that the car is traveling. The lantern shall remain illuminated until the doors close.

2) The lantern shall have a 3" diameter solid sandblasted plastic lens.

3) A multi-stroke gong shall be incorporated in the lantern fixture to sound as the lantern is illuminated to call the attention of the waiting passengers.

e. Work Lights and Receptacles:

1) A single 110 volt lighting receptacle shall be installed in each car in an inconspicuous location.

2) Provide work lights and receptacles at top and bottom of elevator car. Provide lights with wire guards and local switch.

f. Fixture Attachment, Finish and Design:

1) Where no special design is shown, the fixtures, faceplates, push buttons, graphics and finishes shall match the tower passenger elevators.

3) Mount fixtures with tamperproof screws. The screw and key switch cylinder finishes shall match faceplate finish.

g. Electronic Door Control:

1) An electronic door control unit shall be provided as required in connection with automatic elevator operation and power operated elevator doors. This unit shall consist of a photoelectric and light source devices located on the hoistway side of the car doors. Two (2) paralleled light rays shall project across the elevator entrance.

2) The interruption of the light rays shall re-adjust the normal present door open time causing:

   a. The doors to remain open as long as the rays are interrupted.

   b. The closing of the doors a short interval after light rays are re-established the reversal and reopening of doors if the light rays are interrupted while the doors are closing.

3) The time interval for door closing after the re-establishment of the light rays shall be adjustable.

4) If, for any reason, the doors are held open for an extended time (approximately 15 seconds) by a passenger continually standing in the entrance holding the door open, the door shall begin to close at a reduced speed with a gentle nudging force. During the nudging operation a distinctive buzzer will sound. Nudging will be effective until the doors are fully closed.

5) A switch shall be provided in the car operation panel which shall permit disconnecting this electronic unit, when desired.

h. Reopening Device:

1) All passenger and service elevators with electric power operated doors and using an automatic method of elevator operation shall have an automatic reopening device on the car door so arranged that, in the event the door either approaches or meets and obstruction in closing, the car door and the hoistway door shall automatically stop and reopen. The device shall be so designed and adjusted as to minimize the possibility of injury to passengers. The device shall not project into hoistway door opening when the doors are in the fully open position.

i. Handicapped Requirements:

1) Locate door reopening devices at 5 to 29 inches above finish floor.

2) Locate the alarm button and emergency stop switch at 35 inches, and floor and control button not more than 54 inches.

3) Provide raised markings adjacent to the floor and control buttons on a contrasting color background to the left of the

buttons. Letter and numbers shall be minimum of 5/8 inch and raised .03 inch. The markings shall match the tower passenger elevator markings.

4) The centerline of the hall push button station shall be 42" above the floor.

5) Car riding lanterns shall sound once for the "up" direction and twice for the "down" direction.

6) Provide floor designations at each entrance on both sides of jamb at a height of 60" above the floor. Designations shall match the tower passenger elevator designations.

7) Provide an audible signal to tell passenger that the car is stopping or passing a floor served by the elevator. Audible signal shall be activated by a button in car operating panel.

j. Intercommunication System:

1) Provide a car station in the car and connect to the existing intercommunication system provided for the tower elevators.

2) Provide all wire, conduit, fittings, etc., for complete operating system.

k. Emergency Lighting Fixtures:

1) Provide a self-powered emergency light unit in the elevator car consisting of a light fixture and a power pack unit.

a) The light fixture shall contain a minimum of two (2) incandescent lamps.

b) The power pack shall contain a nickel cadmium battery and a charger.

c) Unit shall provide illumination for at least four (4) hours.

2) The operation shall be completely automatic upon failure of normal power supply. Unit shall be connected to normal power supply for car lights and arranged to be energized at all times. After use, battery shall be recharged automatically.

3) The light fixture shall be flush mounted above the main car station.

9. CAR ENCLOSURES

a. It is understood that if the selected manufacturer of the cab is not the same as the Elevator Supplier, all cab material will be constructed in a manner to accommodate the elevator manufacturer's associated equipment, such as operators, hangers, interlocks, etc., as purchased by the Owner or his Agent.

b. The net allowance for the elevator cabs are to be exclusive of any handling charge, applicable sales and/or use taxes, car door hangers, interlocks, exit contact locks, platform, flooring, car door sill, car installation or any operating equipment, and such items are to be included by the Elevator Supplier in the base contract.

c. The net allowance, covering the elevator cars of a design and material as selected, shall include ventilation, lighting doors, base wainscoting, handrails, entrance columns, transoms as required, all necessary cutouts and other cab associated appurtenances that may be designed.

d. The Owner or his authorized representative reserves the right to deduct the net allowances from the Elevator Contract and to purchase the elevator cabs separately. He also retains the right to assign this purchase to the Elevator Supplier for coordination and receive the necessary credits or make the installation by an authorized representative of the Architect and/or Owner.

10. ALTERNATES

a. Alternate No. 1:

1) Submit separate prices for a full maintenance service for all the elevators included in the Specifications, based on a five (5) year contract in accordance with the following:

a) The service agreement shall commence at the termination of the maintenance period included in the base Specifications and shall continue for a period of five (5) years thereafter. Either party may terminate this agreement either at the end of the first five years or at the end of any subsequent year by giving the other party ninety (90) days written notice.

b) The maintenance work shall be performed by elevator men directly employed and supervised by the manufacturer and installer of the equipment who are experienced and skilled in elevators similar to those to be maintained

under this agreement.

c) Except for emergency minor adjustment call-back service, all work shall be performed during the regular working hours of regular working days of the Trade. If at any time it should become necessary and only when so authorized by the Owner to perform any portion of the work other than emergency call-back service during overtime hours, the maintenance contractor shall be reimbursed at the established billing rates for the difference between regular and overtime labor.

d) Maintenance contractor shall maintain all parts of the elevators consisting of, but not limited to, pumps, motors, controllers, selectors, rotating elements, contacts, coils and resistances for operating and motor control circuits, magnet frames, leveling devices, cams, car and hoistway door hangers, tracks and guides, door operating devices, hall lanterns and all other elevator operating, signal and accessory equipment complete.

2) The maintenance work shall consist of the following:

a) Supplying, repairing and replacing of all parts of every description made necessary by wear and tear at the maintenance contractor's cost. Only parts that are correctly designed and suitable in all respects shall be used. The maintenance contractor shall have and maintain on hand locally a supply of spare parts sufficient for the normal maintenance and repair of the equipment. The following items of elevator equipment are excluded: Car enclosures, hoistway enclosures, hoistway doors, door frames and sills, fluorescent light bulbs.

b) Repairing and/or replacing all electrical wiring and conductors extending to the elevator from the main line switch or circuit breaker. Main line switch fuses are excluded.

c) Keeping the guide rails clean and properly lubricated, except when roller type guides are involved no rail lubrication shall be used. When necessary, the maintenance contractor shall renew guide shoe gibs or rollers as required to insure smooth and quiet operation. All oil reservoirs shall be kept properly sealed to prevent leakage.

d) Keeping the exterior of the machinery and any other parts

of the equipment subject to rust properly painted and presentable at all times. The motor windings and controller coils are to be periodically treated with proper insulating compound.

3) The maintenance contractor shall not be required to make renewals or repairs necessitated by reason of negligence or misuse of the equipment by persons other than the maintenance contractor, his representatives and employees, or by reason of any other cause beyond the control of the maintenance contractor, except ordinary wear and tear. The maintenance contractor shall not be required under this agreement to install new attachment as may be recommended or directed by insurance companies or Governmental Authorities.

4) This service shall be performed solely by the manufacturer and installer of the equipment and shall not be assigned or transferred to any agent of subcontractor.

5) The maintenance contractor shall make an annual test of governors and safeties.

6) The price shall be subject to adjustment each year as follows:

a) The material portion of the price shall be increased or decreased by the percentage of increase or decrease shown by the index of "Wholesale Commodity Prices for Metals and Metal Products" published by the U.S. Department of Labor, Bureau of Statistics, for the month within which falls the anniversary of the commencement of the service as compared with the index for the month as of the date of this contract.

b) The labor portion of the price shall be increased or decreased by the percentage of increase or decrease in the straight time hourly cost for the month within which falls the anniversary of the commencement of the service as compared with such straight time hourly labor cost on the date of the Contract.

11. INSPECTION

a. Study the Contract Documents with regard to the work as shown and required so as to insure its completeness.

b. Examine surface and conditions to which this work is to be attached or applied, and notify the Architect in writing, if conditions or surfaces are detrimental to the proper and expeditious installation

of the work. Starting the work shall imply acceptance of the surfaces and conditions to perform the work as specified.

c. Verify, by measurements at the job site, dimensions affecting the work. Bring field dimensions which are at variance with those on the accepted shop drawings to the attention of the Architect. Obtain the decision regarding corrective measures before the start of fabrication of items affected.

d. Cooperate in the coordination and scheduling of the work of this section with the work of other sections so as not to delay job progress.

12. INSTALLATION

a. Install the elevators with skilled workmen in strict accordance with the accepted shop drawings and other submittals.

b. Comply with the code, manufacturer's instructions and recommendations.

c. Coordinate work with the work of other trades for proper time and sequence to avoid construction delays and to insure right-of-way of system. Use lines and levels to ensure dimensional coordination of the work.

d. Accurately and rigidly secure supporting elements within the shaftways to the encountered construction, within the tolerance established.

e. Provide and install motors, switches, controls, safety and maintenance, operating devices in strict accordance with the submitted wiring diagrams and applicable codes and regulations having jurisdiction.

f. After installation touch up in the field surfaces of shop primed elements which have become scratched or damaged.

g. Lubricate operating parts of system as recommended by the manufacturer.

13. PROTECTION AND CLEANING

a. During shipment and installation, adequately protect surfaces against accumulation of paint, mortar, mastic and disfiguration or discoloration, and damage.

b. Upon completion, remove protection and thoroughly clean work and

have it free from discoloration, scratches, dents and other surface defects.

c. The finished installation shall be free of defects. Before final completion and acceptance of the building, repair and/or replace defective work, to the satisfaction of the Architect and the Owner at no additional cost.

END OF SECTION

7WTC

SB1

S-7

1) non SB1 Floors 7 to 29

S-31

2) 31 to 33rd & 34 TYP floor.

S-34

3) 35th floor

10-17 to Port Auth.

4) 44th floor.

5) 36 · 38 (40, 42) Trading floor

6) 37 to 41 & 43.

10-31 To Port Auth.

7) 39th floor.

8) 45th FL

9) 46th 47

11-21 To Port Auth.

10) Roof

11) 3 to 5th floor — 12-19 to Port Auth

BASE BUILDING MODIFICATION OCTOBER 6, 1988

SUBMITTAL PACKAGE TO BE DELIVERED TO PORT AUTHORITY OF NY/NJ FOR APPROVAL

October 17, 1988 - Non-SBI Floors (7 thru 29), 30 thru 34 and 35

1. Microwave shaft and riser closet (35th Floor)
2. Electrical riser closets (Floors 30-35)
3. (2) Electrical risers (Floors 7-30)
4. Communications risers (Floors 7-35)
5. Floor reinforcing for data center (Floor 34)
6. Reinforce floors to accommodate raised floor at (Floors 30-35)
7. Vertical conveyor knock-out slabs
8. Relocated fan room on (35th Floor)
9. Relocated air shafts (Floors 30-35)
10. Relocated communications, electrical, telephone & plumbing risers (Floors 30-35)
11. Supplemental floor framing to accommodate MER
12. Louvers on west wall (35th Floor)
13. Relocated toilet rooms (34th and 35th Floor)
14. Raise elevator stops to accommodate raised flooring (Floors 30-35)
15. Adjust exit stair to accommodate raised flooring
16. Elevator transfer (34th Floor)
17. Ground system for SBI technology equipment
18. Sprinkler modification for core demolition

October 31, 1988 - Floors 36 thru 38, Floors 40 thru 44

1. Reinforce structure at trading floors (100 p.s.f)
2. Supplemental egress stair
3. Electrical riser closets
4. Communications risers
5. Reinforce floors to accommodate raised flooring
6. New elevator machine room/pit and stop Floors 43 and 44 (2 elevators)
7. Vertical conveyor knock-out slab
8. Relocated MER rooms
9. Slab reinforcing for new MER's
10. Relocated communications, electrical, telephone and plumbing risers
11. Louvers on west wall (44th Floor)
12. Relocated toilet rooms
13. Raise elevator stops to accommodate raised flooring
14. Adjust exit stairs to accommodate raised flooring
15. Ground system for SBI technology equipment
16. Ground system for telephone closet
17. Sprinkler modification for core demolition
18. Kitchen exhaust (41st and 37th Floors)

BASE BUILDING MODIFICATION OCTOBER 6, 1988

SUBMITTAL PACKAGE TO BE DELIVERED TO PORT AUTHORITY OF NY/NJ FOR APPROVAL

November 21, 1988 - Floors 45 thru 47 and 39

1. Supplemental egress stair (Floors 39 and 45)
2. Microwave riser shaft (44th Floor to Roof)
3. Kitchen exhaust (45th Floor)
4. (2) electrical riser closets
5. Communication risers
6. Structural reinforcement for cafeteria and dining (45th Floor)
7. Reinforce floors to accommodate raised flooring
8. Slab removal and reinforcing for auditorium (39th Floor)
9. (2) elevators (Floors 43-47)
10. Vertical conveyor knock-out slab
11. Relocated MER's
12. Reinforce structure to support new MER's
13. Louvers at west wall (47th Floor)
14. Relocated toilet rooms
15. New toilet rooms (46th and 47th Floor)
16. Raise elevator stops to accommodate raised floor
17. Adjust exit stairs to accommodate raised floor
18. Gas service at 45th Floor
19. Ground system for SBI technology equipment
20. Ground conductor for telephone closets
21. Sprinkler modification for core demolition

December 19, 1988 - Floors 1 thru 5 and Roof

1. Reinforce roof to support microwave equipment
2. Kitchen exhaust (45th Floor)
3. Electrical riser closets
4. Communications shafts
5. Structural reinforcing for cafeteria (4th Floor)
6. Escalators between 3rd and 4th Floors
7. Diesel fuel riser
8. Supplemental egress stairs (2nd Floor auditorium 4th Floor dining)
9. New penthouse
10. New toilet rooms (3rd and 4th Floors)
11. Mechanical systems outstanding (all floors)
    - A. Active and standby cooling towers
    - B. Active and standby water pumps
    - C. Chilled water plant
    - D. Chilled water pumps
    - E. Looped chilled water risers
    - F. New and relocated DX units
12. Diesel fuel tank (1st Floor)
13. Additional metered water service entry
14. Gas service (4th Floor)
15. New NY Telephone service entry
16. Bus ducts as required
17. Diesel generators
18. UPS systems
19. Dedicated area for visitor reception (1st Floor)
20. Dedicated wet waste area (1st Floor)
21. Secure area for sensitive documents

Building 7 WORLD TRADE - SALOMON BROTHERS Project No. ____

Subject CW PIPING SUPPORT Date 10/6/88

Sheet No. ___ of ___ Computed by SS Checked by ____

Design Calculations

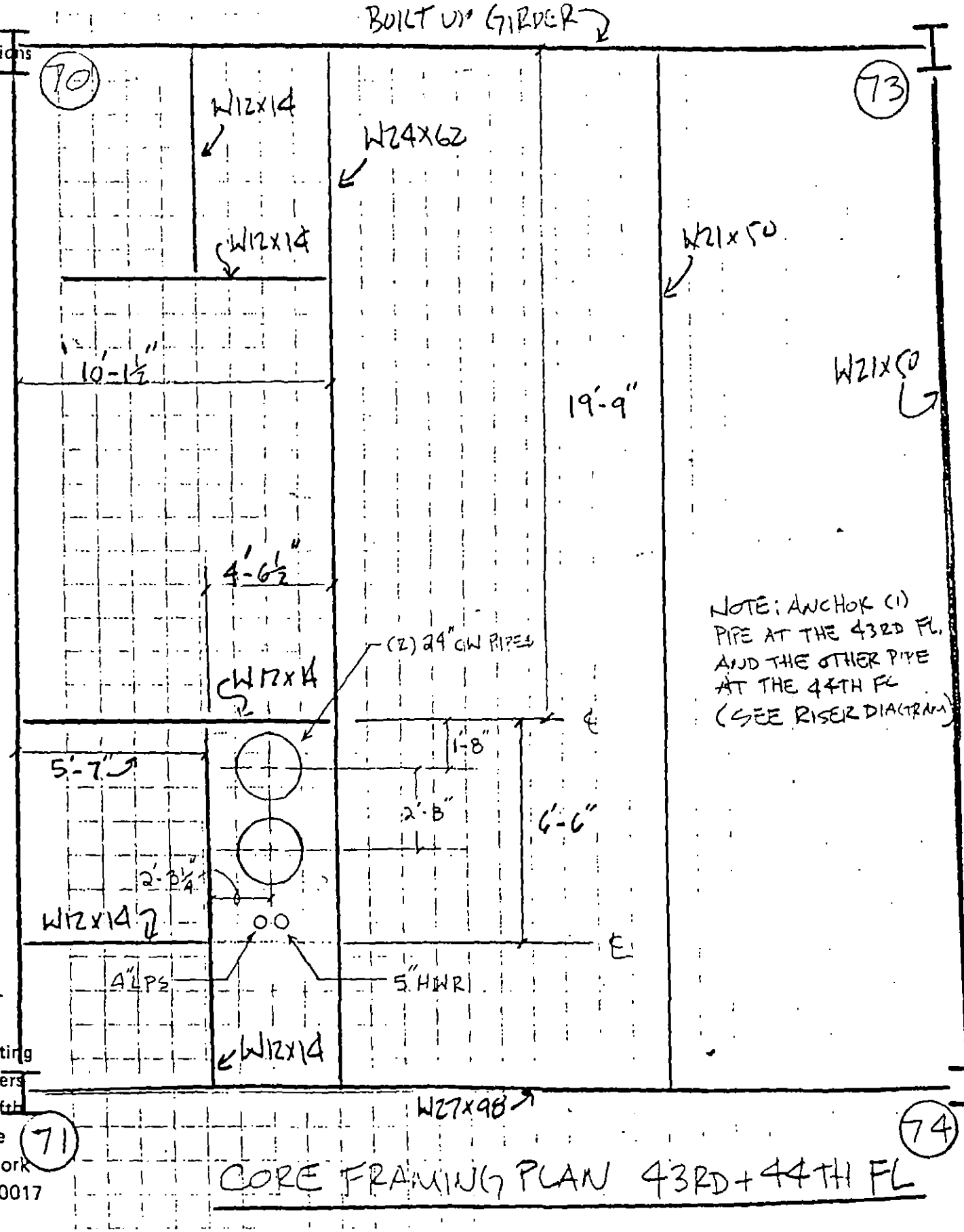

CORE FRAMING PLAN 43RD + 44TH FL

Flack + Kurtz Consulting Engineers
75 Fifth Avenue
New York N.Y. 10017
(212) 532-9600

Design Calculations

Building 7 WORLD TRADE Project No. ____

Subject LOW PRESSURE STEAM LOAD Date 10/7/88

Sheet No. ___ of ___ Computed by SS Checked by ____

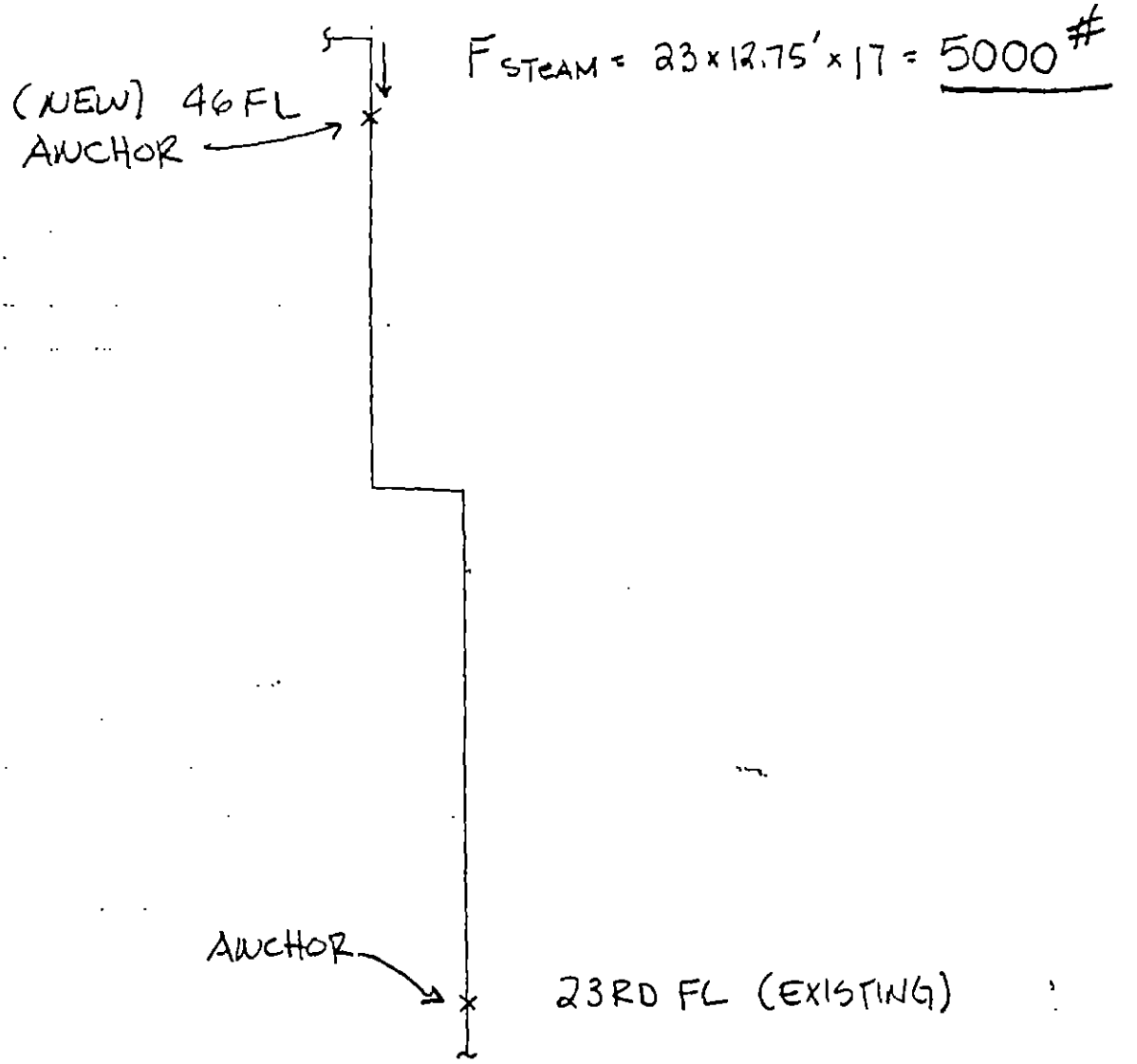

Flack + Kurtz Consulting Engineers
475 Fifth Avenue
New York
N.Y. 10017
(212)
532-9600

Design
Calculations

Building 7 WORLD TRADE CENTER Project No. ____
Subject CW PIPE RISER Date 10/7
Sheet No. ___ of ___ Computed by SS Checked by ____

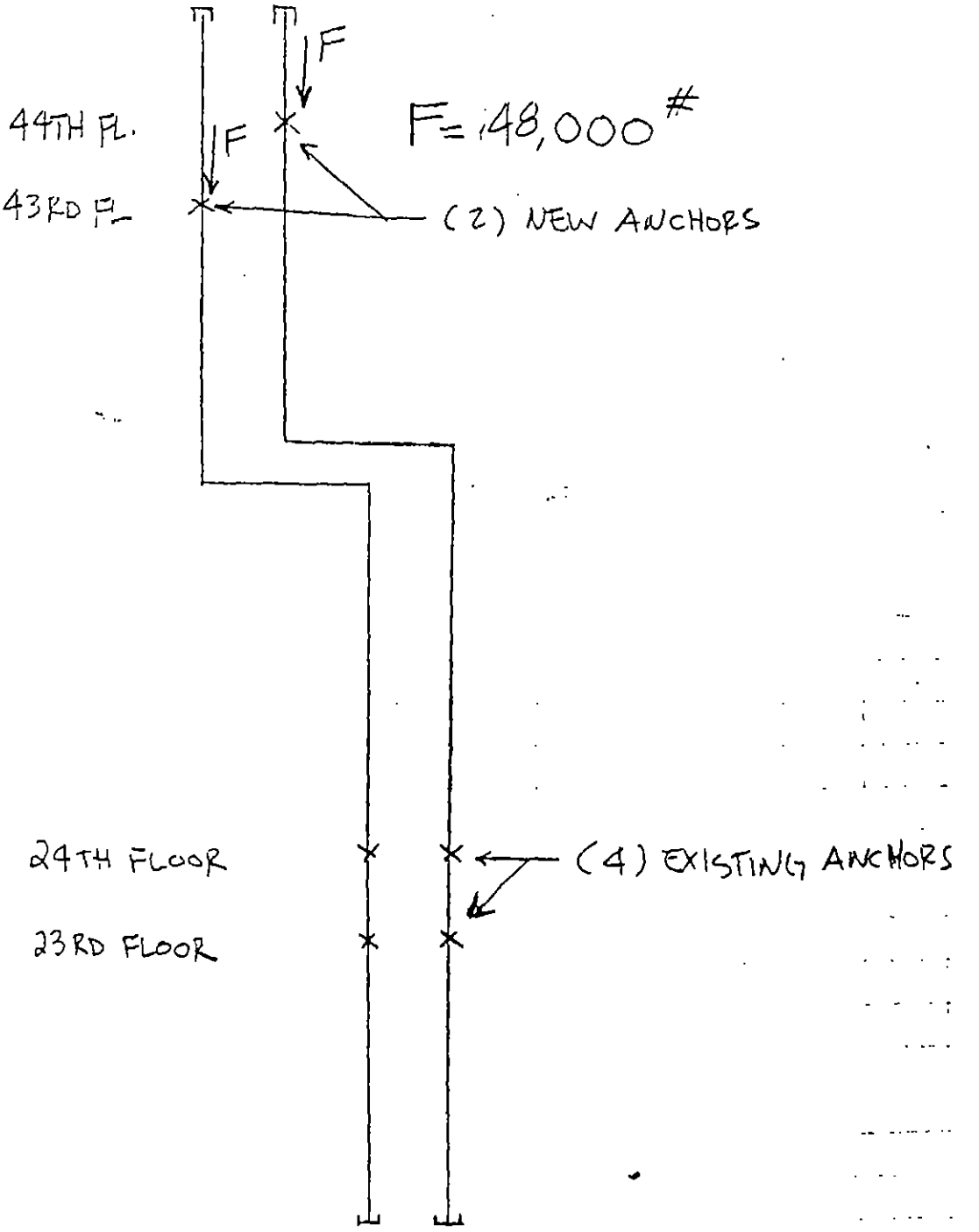

Flack +
Kurtz
Consulting
Engineers
475 Fifth
Avenue
New York
N.Y. 10017
(212)
532-9600

Building 7 WORLD TRADE Project No. ____

Subject HOT WATER RETURN LOAD Date 1/4/88

Sheet No. ___ of ___ Computed by SS Checked by ____

Design Calculations

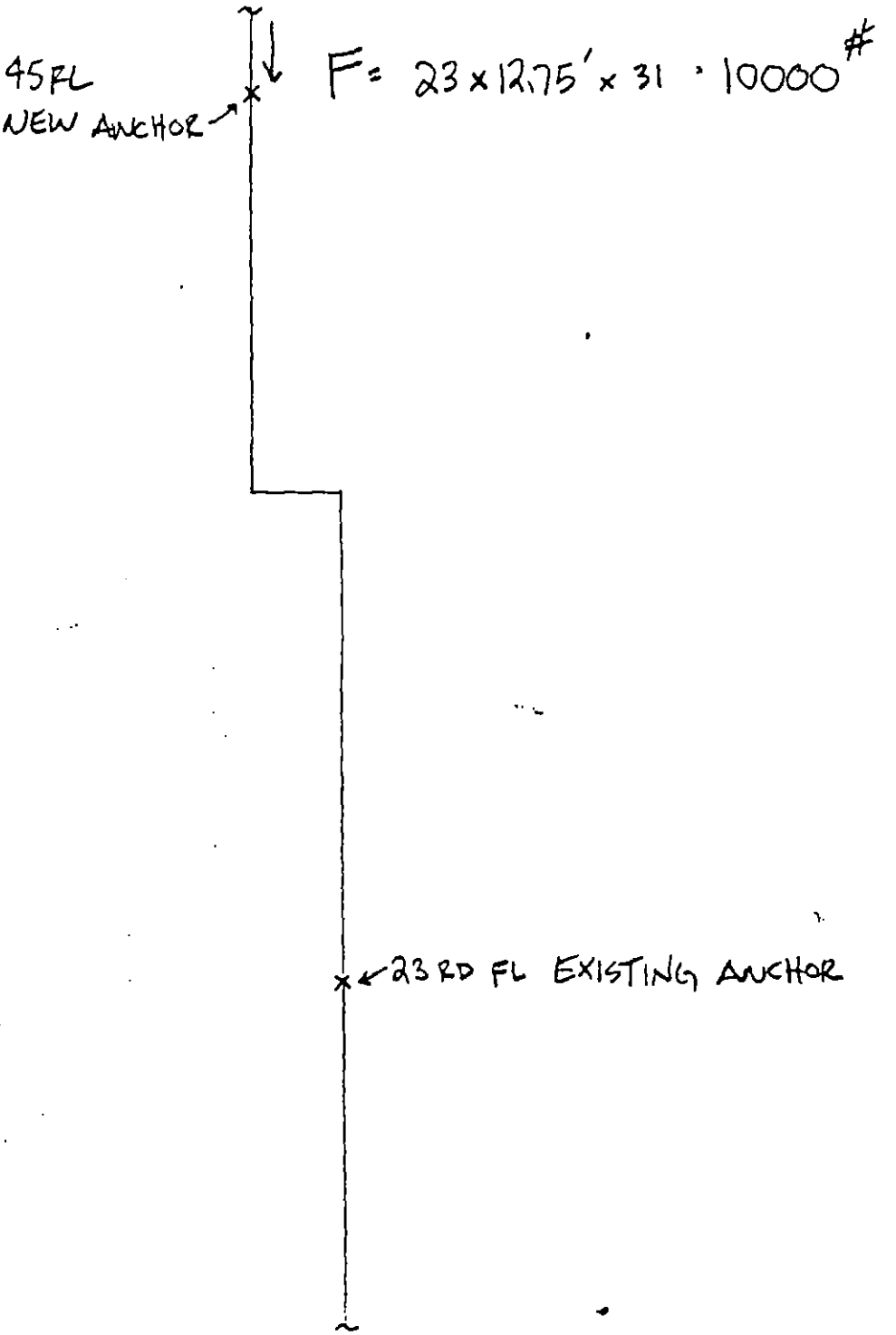

Flack + Kurtz Consulting Engineers
475 Fifth Avenue
New York
N.Y. 10017
(212)
532-9600

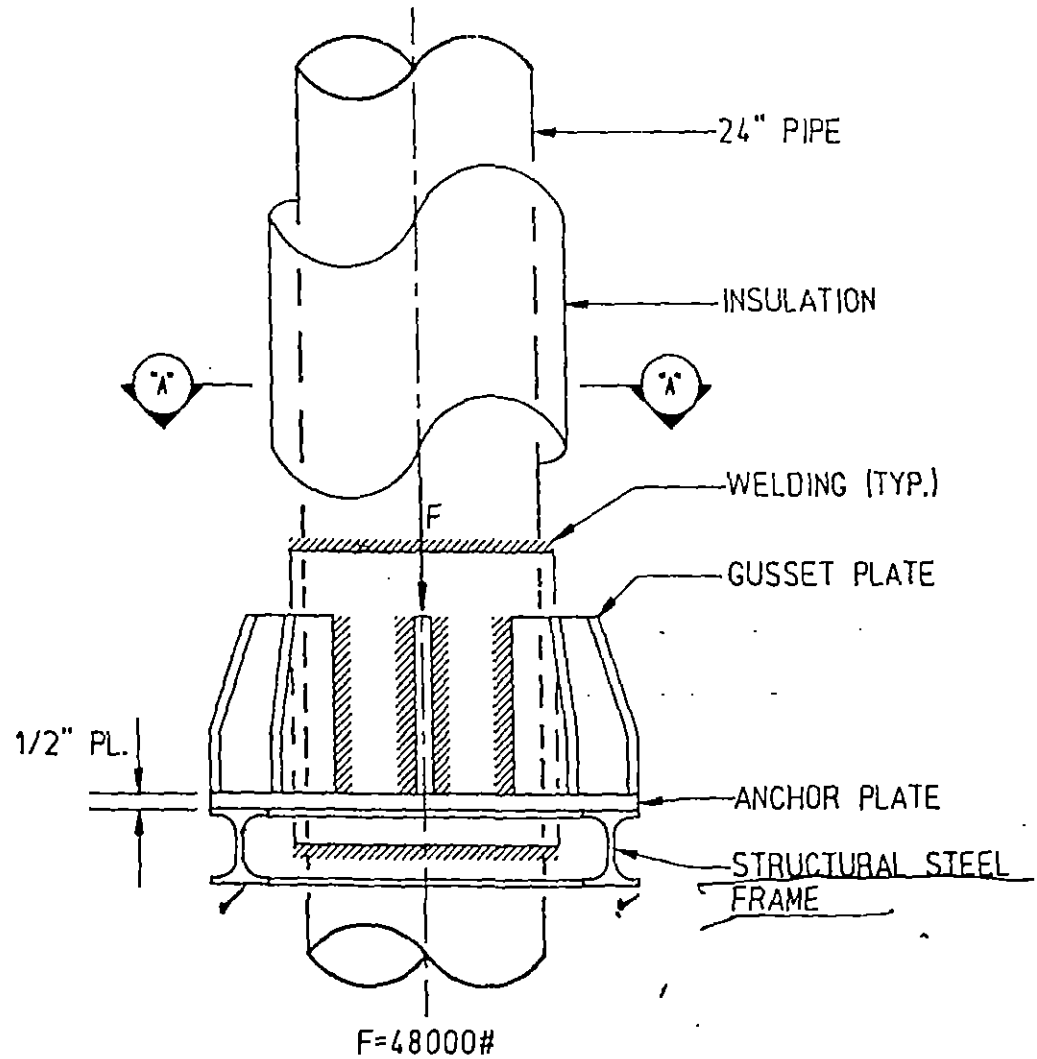

ANCHOR SUPPORT DETAIL AT 43RD AND 44TH FLOOR

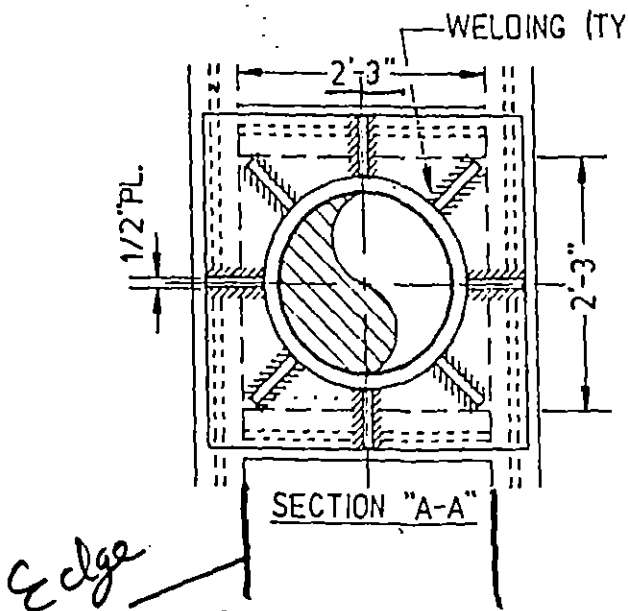

Building 7 WORLD TRADE [illegible] 2 Project No. ____
Subject PIPE RISERS Date 10-21-88
Sheet No. 1 of ____ Computed by ________ Checked by ________

[redacted]esign
[redacted]lculations

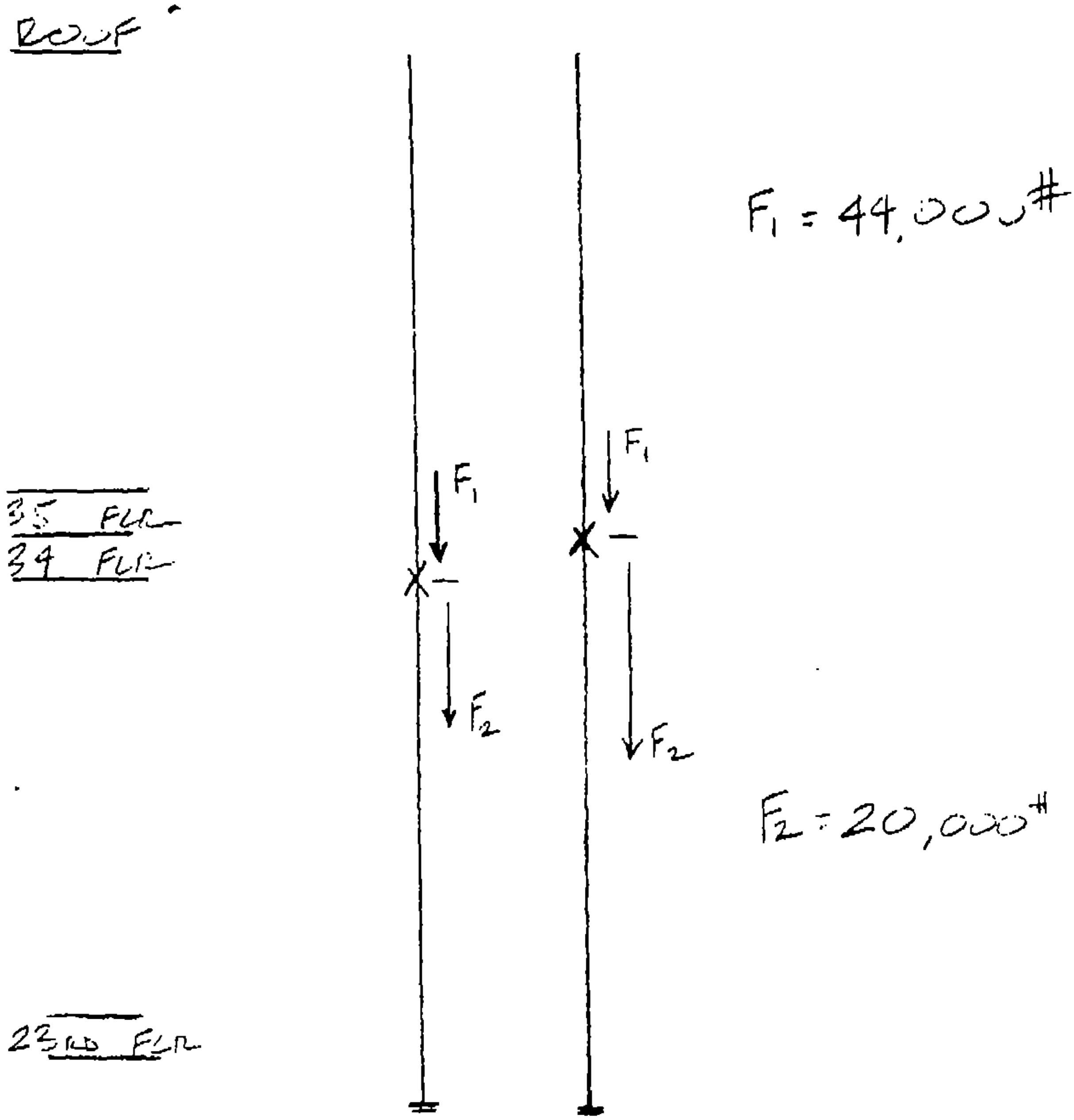

TYP FOR BOTH [illegible] OF RISERS
(AN[illegible] @ 34 [illegible])

Flack +
K[redacted]rtz
Consulting
E[redacted]ineers
4[redacted] Fifth
Avenue
N[redacted]v York
N.[redacted]. 10017
(212)
5[redacted]-9600

De[redacted]gn
Calculations

la[redacted] +
u[redacted]
onsulting
ng[redacted]eers
75 Fifth
ve[redacted]ue
e[redacted]York
.Y. 10017
21[redacted]
32[redacted]600

Building 7 WORLD TRADE CENTER Project No. ____
Subject PIPE RISER LOCATION (AREA "A") Date 10-21-88
Sheet No. 2 of ____ Computed by ________ Checked by ________

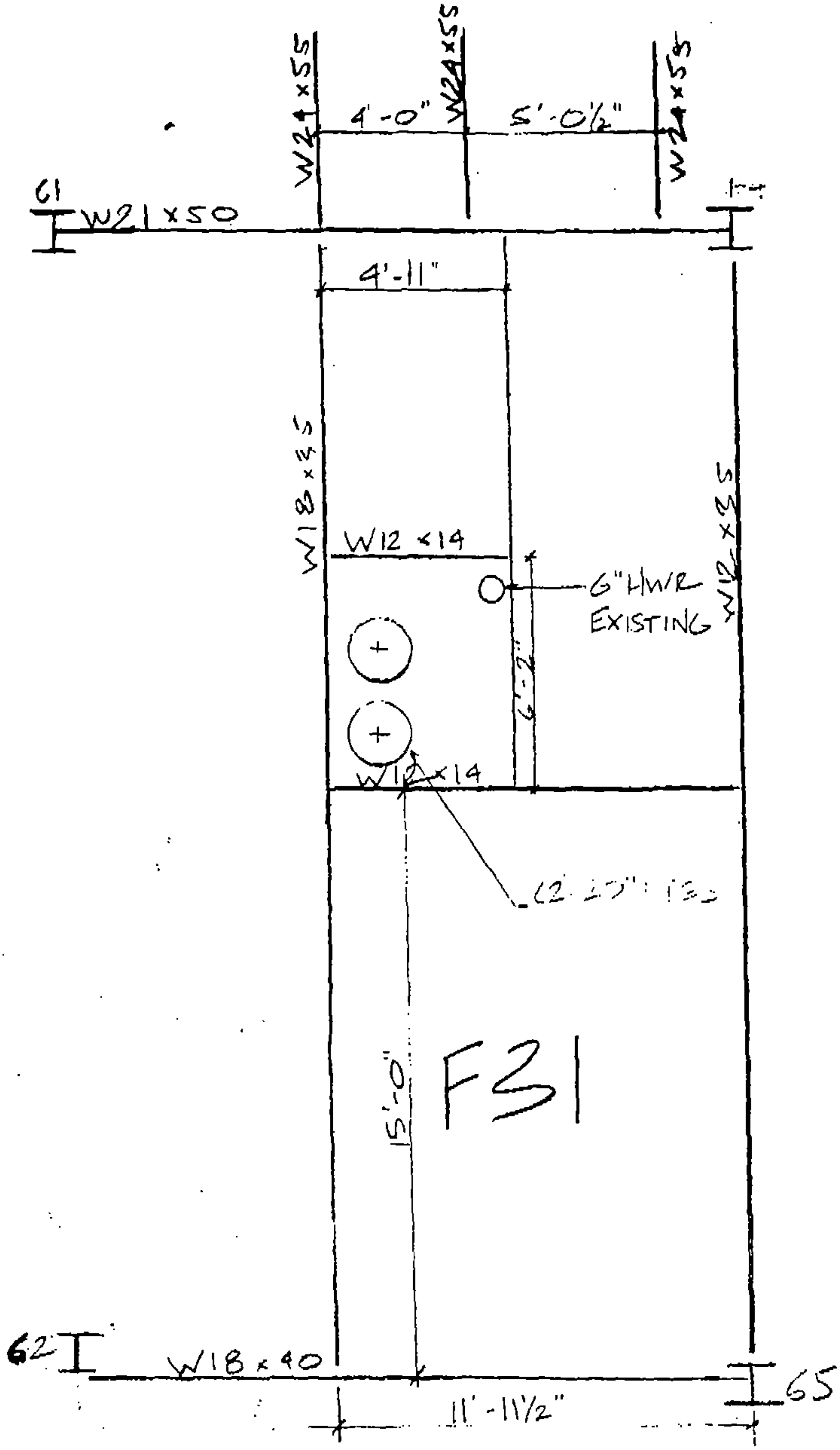

Building WORLD TRADE CENTER Project No. ___

Subject PIPE RISER LOCATION (AREA "B") Date 10-21-88

Sheet No. 3 of ___ Computed by _____ Checked by _____

Design Calculations

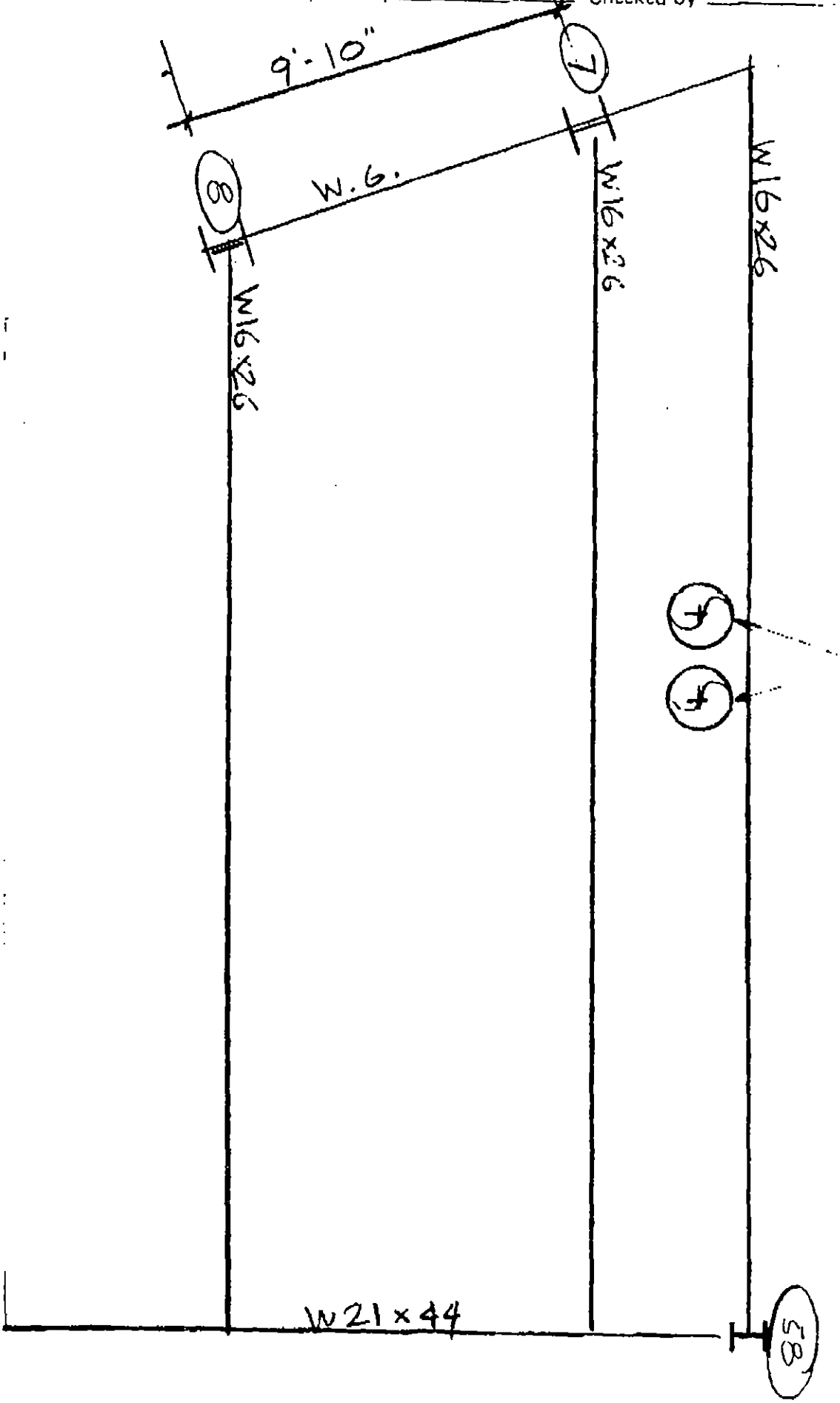

Flack + Kurtz Consulting Engineers
475 Fifth Avenue
New York NY 10017
(212) 532-9600

(4)

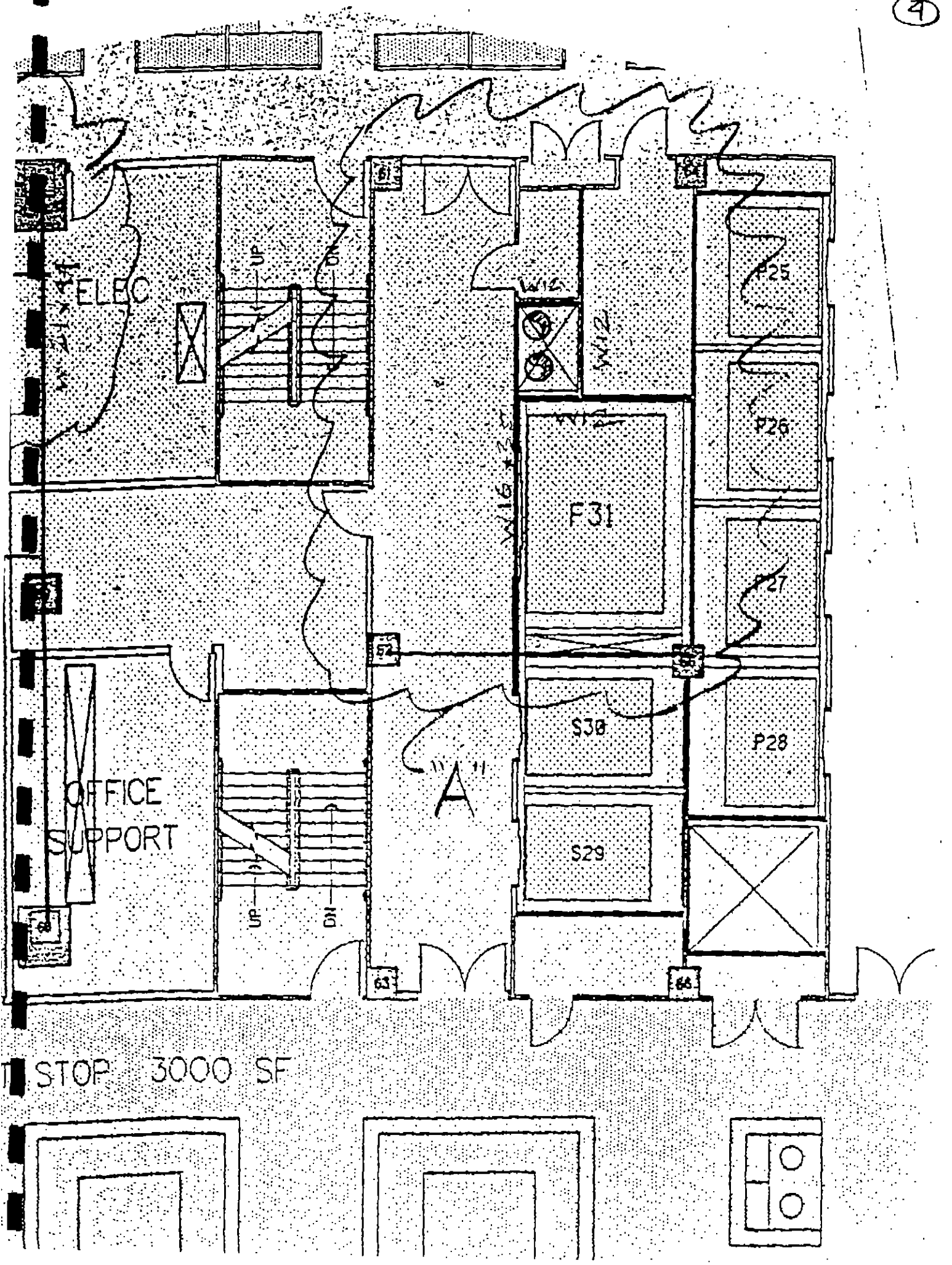
ELEC
UP
DN
W12
W12
W16
F31
P25
P26
P27
P28
S30
S29
OFFICE
SUPPORT
A
UP
DN
STOP 3000 SF

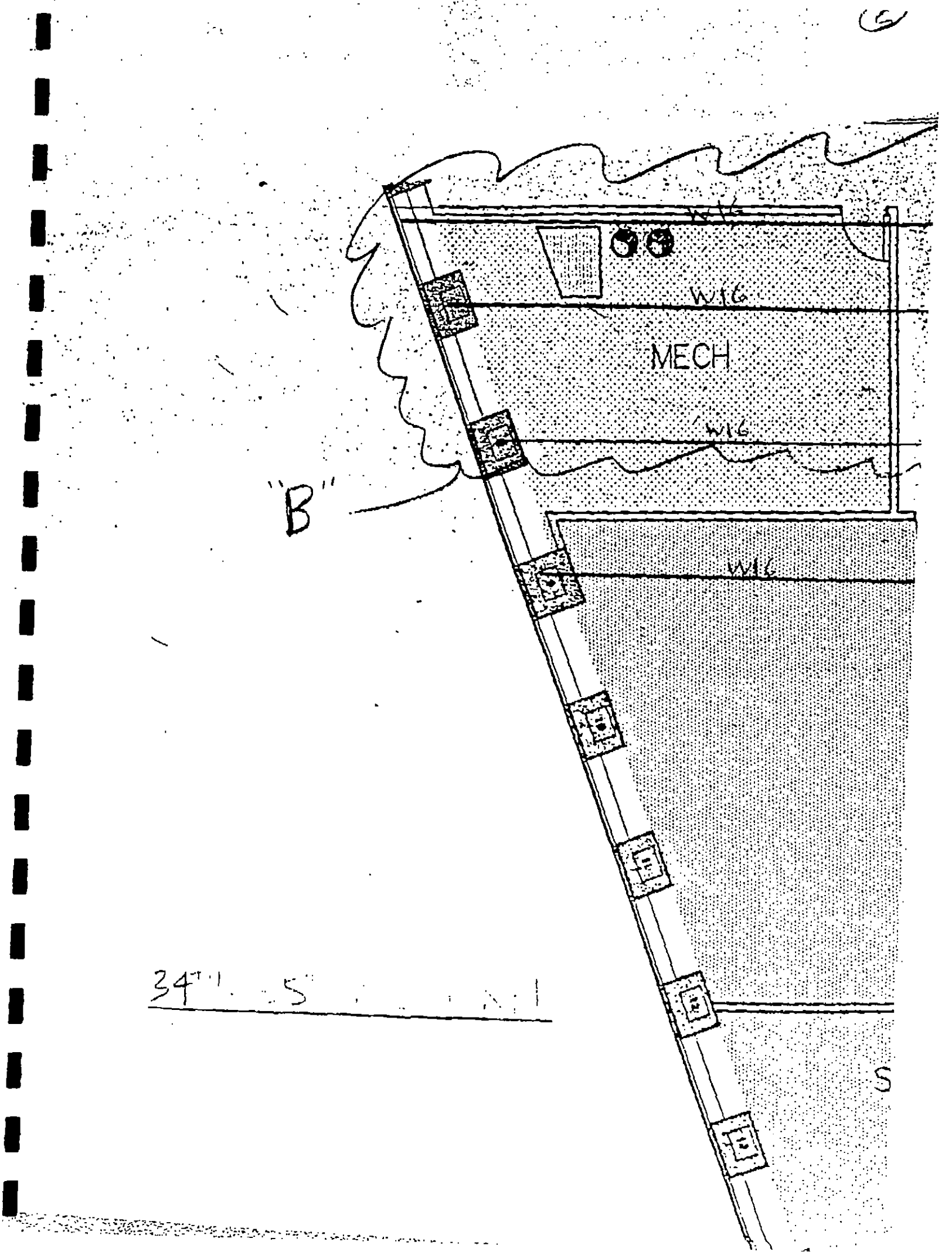
W16
MECH
W16
W16
"B"
S

BASE BUILDING MODIFICATION

SEPTEMBER 29, 1988

SUBMITTAL PACKAGE TO BE DELIVERED
TO PORT AUTHORITY OF NY/NJ FOR APPROVAL

October 17, 1988 - Non-SBI Floors (7-29), 30-34 and 35 Fatality Room

- Microwave shaft and riser closet (35th Floor)
- Electrical riser closets (Floors 30-35)
- (2) Electrical risers (Floors 7-30)
- Communications risers (Floors 7-35)
- Floor reinforcing for data center (Floor 34)
- ~~Reinforce~~ floors to accommodate raised floor at (Floors 30-35)
- Air shaft transfer (23rd Floor)
- Vertical conveyor knock-out slabs
- Relocated fan room on (35th Floor)
- Relocated air shafts (Floors 30-35)
- Relocated communications, electrical, telephone & plumbing risers (Floors 30-35)
- Supplemental floor framing to accommodate MER
- Louvers on west wall (35th Floor)
- Relocated toilet rooms (34th and 35th Floor)
- Raise elevator stops to accommodate raised flooring (Floors 30-35)
- Adjust exit stair to accommodate raised flooring
- Elevator transfer (34th Floor)
- Ground system for SBI technology equipment
- Ground convector to each telephone closet
- Sprinkler modification for core demolition

October 31, 1988 - Floors 36-38, Floors 40-44

- Reinforce structure at trading floors (100 p.s.f)
- Supplemental egress stair
- Electrical riser closets
- Communications risers
- Reinforce floors to accommodate raised flooring
- New elevator machine room/pit and stop Floors 43 and 44 (2 elevators)
- Vertical conveyor knock-out slab
- Relocated MER rooms
- Slab reinforcing for new MER's
- Relocated communications, electrical, telephone and plumbing risers
- Louvers on west wall (44th Floor)
- Relocated toilet rooms
- Raise elevator stops to accommodate raised flooring
- Adjust exit stairs to accommodate raised flooring
- Ground system for SBI technology equipment
- Ground system for telephone closet
- Sprinkler modification for core demolition
- Kitchen exhaust (41st and 37th Floors)

BASE BUILDING MODIFICATION

SEPTEMBER 29, 1988

SUBMITTAL PACKAGE TO BE DELIVERED
TO PORT AUTHORITY OF NY/NJ FOR APPROVAL

November 21, 1988 - Floors 44-47

- Supplemental egress stair (Floors 39 and 45)
- Microwave riser shaft (44th Floor to Roof)
- Kitchen exhaust (45th Floor)
- (2) electrical riser closets
- Communication risers
- Structural reinforcement for cafeteria and dining (45th Floor)
- Reinforce floors to accommodate raised flooring
- Slab removal and reinforcing for auditorium (3[illegible]th Floor)
- (2) elevators (Floors 43-47)
- Vertical conveyor knock-out slab
- Relocated MER's
- Reinforce structure to support new MER's
- Louvers at west wall (47th Floor)
- Relocated toilet rooms
- New toilet rooms (46th and 47th Floor)
- Raise elevator stops to accommodate raised floor
- Adjust exit stairs to accommodate raised floor
- Gas service at 45th Floor
- Ground system for SBI technology equipment
- Ground conductor for telephone closets
- Sprinkler modification for core demolition

December 19, 1988 - Floors 1-5 and Roof

- Reinforce roof to support microwave equipment
- Kitchen exhaust (45th Floor)
- Electrical riser closets
- Communications shafts
- Structural reinforcing for cafeteria (4th Floor)
- Escalators between 3rd and 4th Floors
- Diesel fuel riser
- Supplemental egress stairs (2nd Floor auditorium 4th Floor dining)
- New penthouse
- New toilet rooms (3rd and 4th Floors)
- Mechanical systems outstanding (all floors)
- Diesel fuel tank (1st Floor)
- Additional metered water service entry
- Gas service (4th Floor)
- New NY Telephone service entry
- Bus ducts as required
- Diesel generators
- UPS systems
- Dedicated area for visitor reception (1st Floor)
- Dedicated wet waste area (1st Floor)
- Secure area for sensitive documents

THE OFFICE OF
IRWIN G. CANTOR, P.C.
Consulting Engineers
"Member Cantor/Seinuk Group"
219 EAST 42ND STREET
NEW YORK, N.Y. 10017
PHONE (212) 949-9150

JOB
SHEET NO. OF
CALCULATED BY DATE
CHECKED BY DATE
SCALE

EXIST LOAD

D.L	50
Ceil + mech	5
Part	12
BEAM + ENCA	8
LIVE LOAD	50
TOTAL LOAD =	125

DESIGN LOAD

D.L + BM	55	55
Ceil + mech	5	29
Part	12	
Beam + ENC	38	
RAISED FLOOR	9	
LIVE LOAD	79	
TOTAL LOAD	163	

$\frac{LL}{DL} = \frac{79}{84} = 0.94$

say 1

DL = 55

S + L = 20 + .43(50)

=

AREA	L/DL	LL = 79
149 OR LESS	100	79
150 ~ 299	85	67
300 ~ 449	70	56
450 ~ 599	60	48
600 ~ MORE	55	44

PRODUCT 204-L NEBS Inc. Groton Mass. 01471

DESIGN AND DRAFTING CONTROL

DATE: 10/5/88

NAME OF ARCHITECT: S.O.M.

PROJECT NAME & Nº: 7 WORLD TRADE CENTER # 88057

PROJECT MANAGER: KAMRAN MOAZAMI

DWG. Nº	DRAWING TITLE	% ENGINEERING AND DRAFTING COMPLETED (10 20 30 40 50 60 70 80 90 100)	PAPER PLOT	MYLAR PLOT	REMARKS
S-4	7TH - 29TH FL FRMG PLAN	E / D	✓		
S-5	30TH FL FRMG PLAN	E / D	✓		
S-6	31ST FL FRMG PLAN	E / D	✓		
S-7	32ND FL FRMG PLAN	E / D	✓		
S-8	33RD FL FRMG PLAN	E / D	✓		
S-9	34TH FL FRMG PLAN	E / D	✓		
S-10	35TH FL FRMG PLAN	E / D	✓		
S-32	TYP SUPERSTR. DETS. I	E / D			
S-33	TYP. SUPERSTR DETS II	E / D		✓	

S-34 SUPERSTR SECT I

7WTC

SBI

1) non SBI floors (7 to 29)

10-15 to Port Auth.

2) (31 to 33rd & 34) Typ. floor.

3) (35th floor)

4) (44th floor.)

40. 42 Trading floor

10-31 To Port Auth.

5) 36. 38

6) 37. To 41 & 43.

7) 39th floor.

11-21 To Port Auth.

8) 45th FL

9) 46th 47

10) Roof

11) 3 to 5th floor — 12-19 to Port Auth.

Electronic Systems Associates

RECEIVED
OCT 06 1988
IRWIN G. CANTOR
CONSULTING ENGINEERS

October 4, 1988

Mr. Warren Matheson
Skidmore, Owings & Merrill
220 East 42nd Street
New York, New York 10017

Re: Communications Shaft Loading

Dear Warren:

Due the high density of vertical and horizontal cables we require the floor around the shaft be reinforced at 500 pounds per square foot.

If you have any questions, please call.

Very truly yours,

Thomas A. Morley Jr.

Thomas A. Morley, Jr.
Engineer

TAM:jm
0376J

cc: Skidmore, Owings & Merrill
Mr. Donald Sullivan
Mr. Bernie Armstrong

Salomon Brothers Inc
Mr. Mike Simone

Office of Irwin Cantor
Mr. Akbar Tamboli

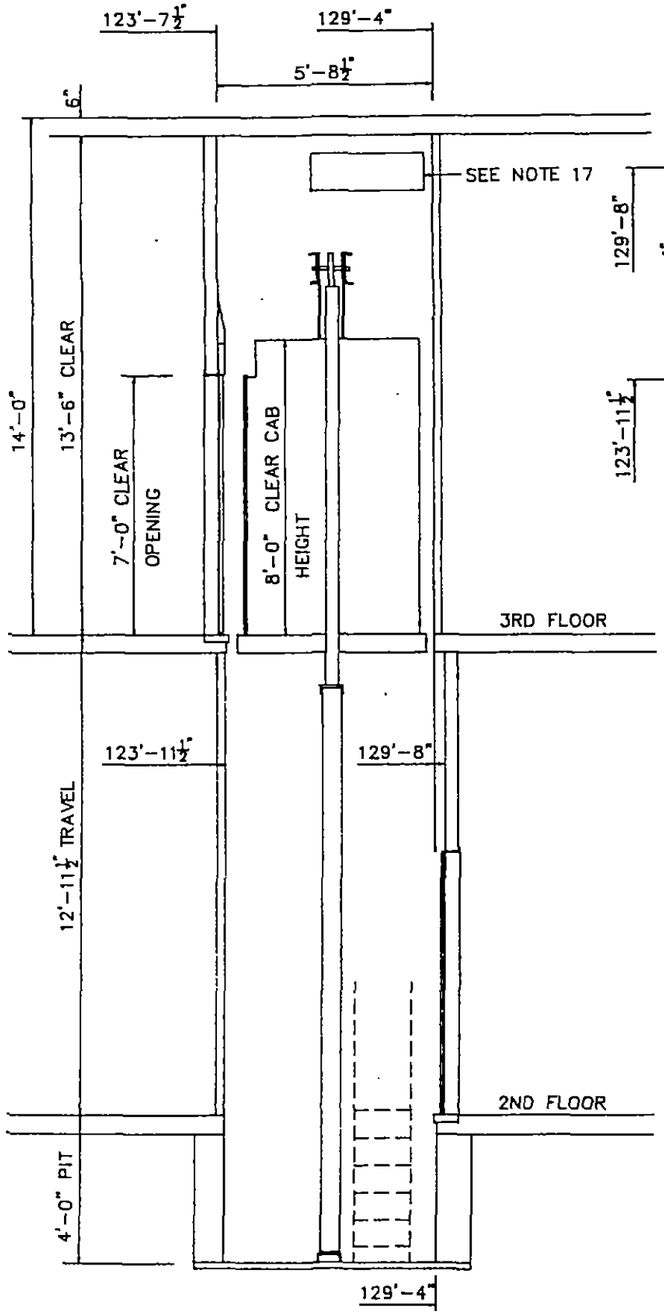

OCCUPIED SPACE BELOW

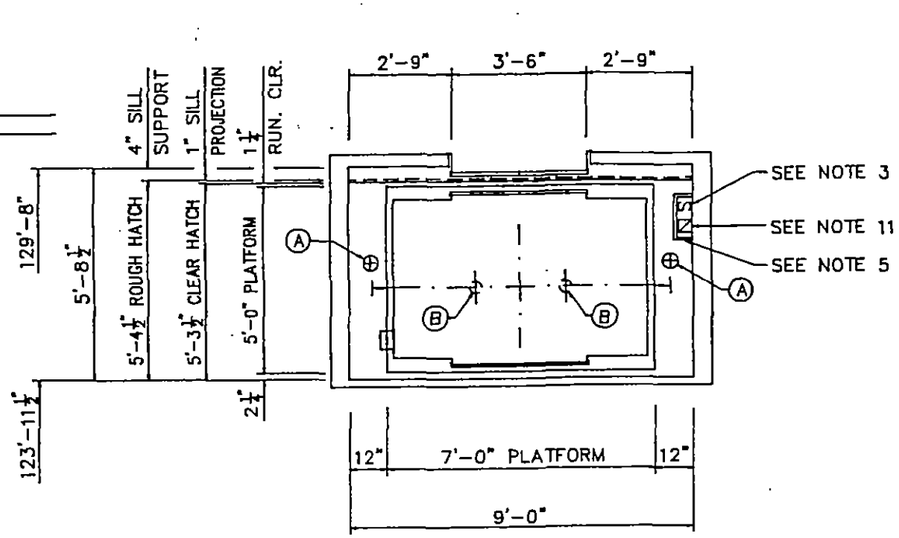

PLAN VIEW @ 2ND FLOOR

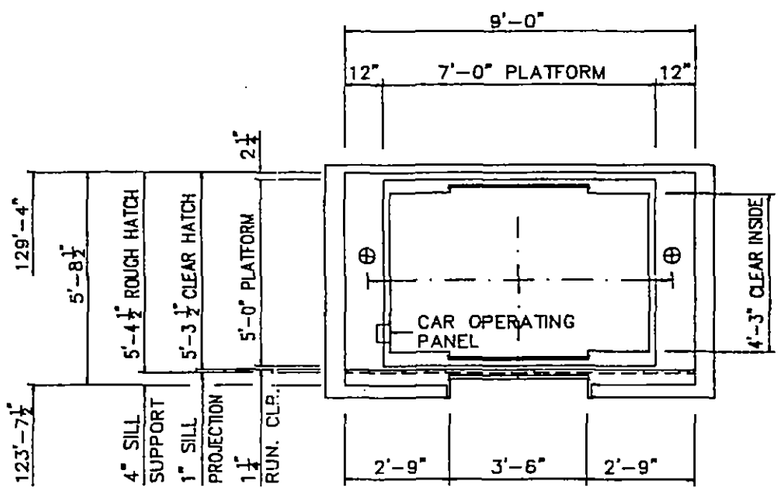

PLAN VIEW @ 3RD FLOOR

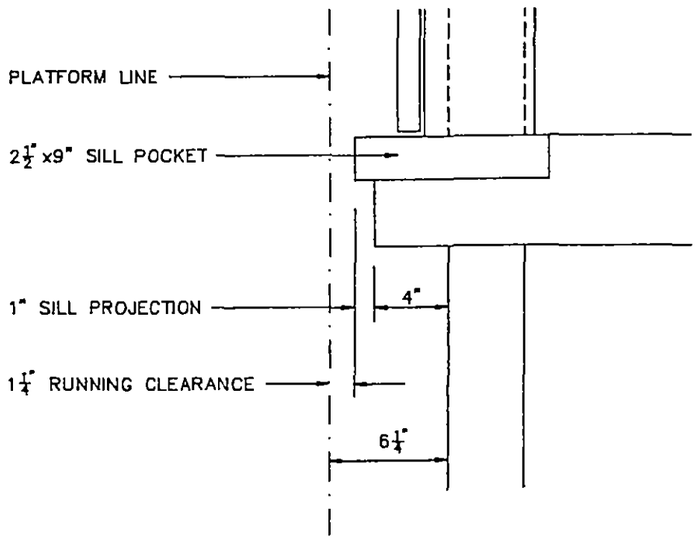

SILL SUPPORT DETAIL

SCALE: 1 1/2"=1'-0"

PIT LOADS

A	6.5K ON EACH CYLINDER
B	7.9K ON EACH BUFFER

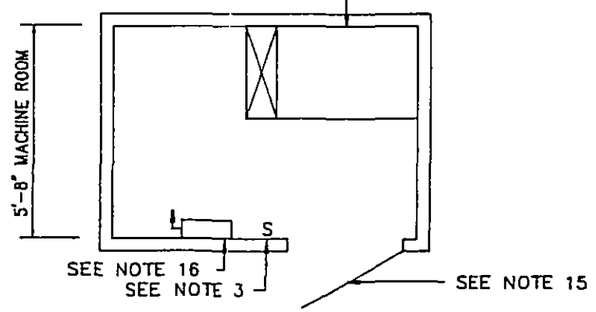

REMOTE MACHINE ROOM LAYOUT

NOT MORE THAN 25' FROM ELEVATOR

HE 32

2500# @ 125 FPM

REVISED ON 9/15/88

John A. Van Deusen & Associates Inc.

Building Transportation Systems Consultants

5 Regent Street - Suite 524
Livingston, N.J. 07039-1617
201-994-9220/212-772-0128

PROJECT: SALOMON BROTHERS

TITLE: PLAN VIEW

SCALE: 1/4"=1'-0"	DRAWN BY:	DRAWING NUMBER:
DATE: 08-25-88	AO/pc	1513PL1